Thermion Duo

Manual

Content

Specifications
About the device

- Description
- Package Contents
- Components and Controls
- Features

Power supply

- Precautions
- Recommendations for Battery Use
- Battery Charging
- Battery Installation
- Switching and Changing the Batteries
- External Power Supply

Getting Started

- Mounting on the Rifle
- Powering on and Image Setting
- Button Operation

Zeroing

- How to Zero
- Add New Distance
- Zeroing Parameters Settings
- Windage/Elevation
- Magnification (when Zeroing)
- Freeze
- Name Distance
- Thermal/Digital channel selection
- Change Primary Distance
- Delete Distance

Interface

- Status Bar
- Quick Menu
- Main Menu

Enter the Main Menu
Reticle & Zeroing
Zeroing Profile
Reticle Type
Reticle Colour
Reticle Brightness
Smoothing Filter
Colour Modes
Bluetooth
Display Settings
User Mode
Wi-Fi Settings
Microphone
Ballistics
Calibration Mode
General Settings
How to fix dead pixels of a thermal imaging microbolometer
Defective Pixel Repair
Restore Default Pixel Map
Device Information

Functions

Amplification Level
Image Modes (Thermal Imaging/Digital/Multispectral PiP)
Ballistic Calculator
Video Recording and Photography
Discrete Digital Zoom
PiP Function
Display-Off Function
Wi-Fi Function
Scalable Reticles
Stadiametric Rangefinder
USB Connection
Wireless Remote Control
Descriptions of Controls
Remote Control Activation

Software

Stream Vision 2
Firmware Update

Maintenance

Technical Maintenance
Technical Inspection

Troubleshooting
Legal Compliances and Disclaimers

Specifications

You can learn more about the main parameters **here**.

DXP50

Model	**DXP50**
SKU	76571
Microbolometer	
Type	uncooled
Resolution, pixels	640x480
Pixel Pitch, µm	17
Sensor NETD, mK	< 25
System NETD, mK	< 18
Frame refresh rate, Hz	50
Digital Sensor	
Type	CMOS
Resolution, pixels	3840x2160
Optical Specifications	
Lens, mm: - Thermal imaging channel - Digital channel	 F50 F/1.0 F17 F/4.34 (non-focusing lens)
Magnification, x	2-16
Eye relief, mm/inch	50/1.96
Field of view (H), °/m@100	12.4/21.8
Diopter adjustment, D	-3/+5

Detection distance (Thermal imaging channel, object of "deer" type), m/y	1800/1968.5
Aiming Reticle	
Click value, mm@100 m – when magnifying, x	21.3 mm – 2x 10.7 mm – 4x 5.3 mm – 8x 2.7 mm – 16x
Click range (H/V), mm@100 m (H/V)	4250/4250
Display	
Type	AMOLED
Resolution, pixels	1024x768
Operating Features	
Diameter of the riflescope body to assemble the mounting rings, mm	30
Power Supply, V	3–4.2
Battery type / Capacity / Rated Output Voltage	Li-Ion Battery Pack APS2 / 2000 mAh / DC 3.7 V (removable) or Li-Ion Battery Pack APS3 / 3200 mAh / DC 3.7 V (removable)* Li-Ion Battery Pack APS5 / 4900 mAh / DC 3.7 V (built-in)
External Power Supply	5 V, 9 V (USB Type-C Power Delivery)
Battery Packs (built-in APS5 and removable APS2) operating time at temp. = 22 °C, hrs**	6

Max. recoil power on rifled weapon, Joules	6000
Max. recoil power on smoothbore weapon, caliber	12
Degree of protection IP code (IEC60529)	IPX7
Operating temperature, °C / °F	-25 – +50 / -13 – +122
Dimensions with an eyecup, mm/inch	420x78x83.5 / 16.54x3.07x3.29
Weight (with APS2 battery), kg/oz	0.96 / 33.86
Video Recorder	
Photo / video resolution, pixels	1024x768
Video / photo format	.mp4 / .jpg
Built-in memory	eMMC 16 GB
Wi-FiChannel* **	
Frequency	2.4/5 GHz
Standard	IEEE 802.11 b/g/n/ac
Bluetooth	
Wireless Protocol	BLE 4.2

* Purchased separately.

** The actual operating time depends on the intensity of using Wi-Fi, video recorder and operating observation channels.

*** The reception range may vary depending on various factors: obstacles, other Wi-Fi networks.

DXP55

Model	DXP55
SKU	76572
Microbolometer	
Type	uncooled
Resolution, pixels	640x480
Pixel Pitch, µm	17
Sensor NETD, mK	< 25
System NETD, mK	< 18
Frame refresh rate, Hz	50
Digital Sensor	
Type	CMOS
Resolution, pixels	3840x2160
Optical Specifications	
Lens, mm: - Thermal imaging channel - Digital channel	 F50 F/1.0 F17 F/4.34 (non-focusing lens)
Magnification, x: - Thermal imaging channel - Digital channel	 2-16 4-32
Eye relief, mm/inch	50/1.96
Field of view (H), °/m@100: - Thermal imaging channel - Digital channel	 12.4/21.8 6.1/10.6

Diopter adjustment, D	-3/+5	
Detection distance (Thermal imaging channel, object of "deer" type), m/y	1800/1968.5	
Aiming Reticle		
Click value, mm@100 m – when magnifying, x	Thermal imaging channel	Digital channel
	21.3 mm – 2x 10.7 mm – 4x 5.3 mm – 8x 2.7 mm – 16x	10.3 mm – 4x 5.2 mm – 8x 2.6 mm – 16x 1.3 mm – 32x
Click range (H/V), mm@100 m (H/V)	4250/4250	
Display		
Type	AMOLED	
Resolution, pixels	1024x768	
Operating Features		
Diameter of the riflescope body to assemble the mounting rings, mm	30	
Power Supply, V	3–4.2	

Battery type / Capacity / Rated Output Voltage	Li-Ion Battery Pack APS2 / 2000 mAh / DC 3.7 V (removable) or Li-Ion Battery Pack APS3 / 3200 mAh / DC 3.7 V (removable)* Li-Ion Battery Pack APS5 / 4900 mAh / DC 3.7 V (built-in)
External Power Supply	5 V, 9 V (USB Type-C Power Delivery)
Battery Packs (built-in APS5 and removable APS2) operating time at temp. = 22 °C, hrs**	6
Max. recoil power on rifled weapon, Joules	6000
Max. recoil power on smoothbore weapon, caliber	12
Degree of protection IP code (IEC60529)	IPX7
Operating temperature, °C / °F	-25 – +50 / -13 – +122
Dimensions with an eyecup, mm/inch	420x78x83.5 / 16.54x3.07x3.29
Weight (with APS2 battery), kg/oz	0.96 / 33.86
Video Recorder	

Photo / video resolution, pixels	1024x768
Video / photo format	.mp4 / .jpg
Built-in memory	eMMC 16 GB
Wi-FiChannel* **	
Frequency	2.4/5 GHz
Standard	IEEE 802.11 b/g/n/ac
Bluetooth	
Wireless Protocol	BLE 4.2

* Purchased separately.

** The actual operating time depends on the intensity of using Wi-Fi, video recorder and operating observation channels.

*** The reception range may vary depending on various factors: obstacles, other Wi-Fi networks.

Description

https://www.youtube.com/embed/FWL2IyDFZxk

https://www.youtube.com/embed/qNJA4GuNhQM

The **Thermion Duo** multispectral riflescopes are designed for use on hunting rifles.

The riflescope allows you to quickly switch between thermal imaging and colour digital channels, and also supports PiP multispectral mode, when the image of one channel is displayed in the main window, and the second – in the PiP “window”.

These riflescopes are designed for hunting, target shooting and recreational shooting, observation and orientation.

To get started, see the sections:

Battery Charging

Battery Installation

Mounting on the Rifle

Powering on and Image Setting

Image Modes (Thermal Imaging/Digital/Multispectral PiP)

How to Zero

Stream Vision 2

Ballistic Calculator

Package Contents

- Multispectral riflescope
- Removable rubber eyecup
- APS2 Battery Pack
- APS battery charger
- Power adapter
- USB Type-C cable with USB Type-A adapter
- Carrying case
- Lens-cleaning cloth
- Quick User Manual
- Warranty card
- APS3 battery cover

Components and Controls

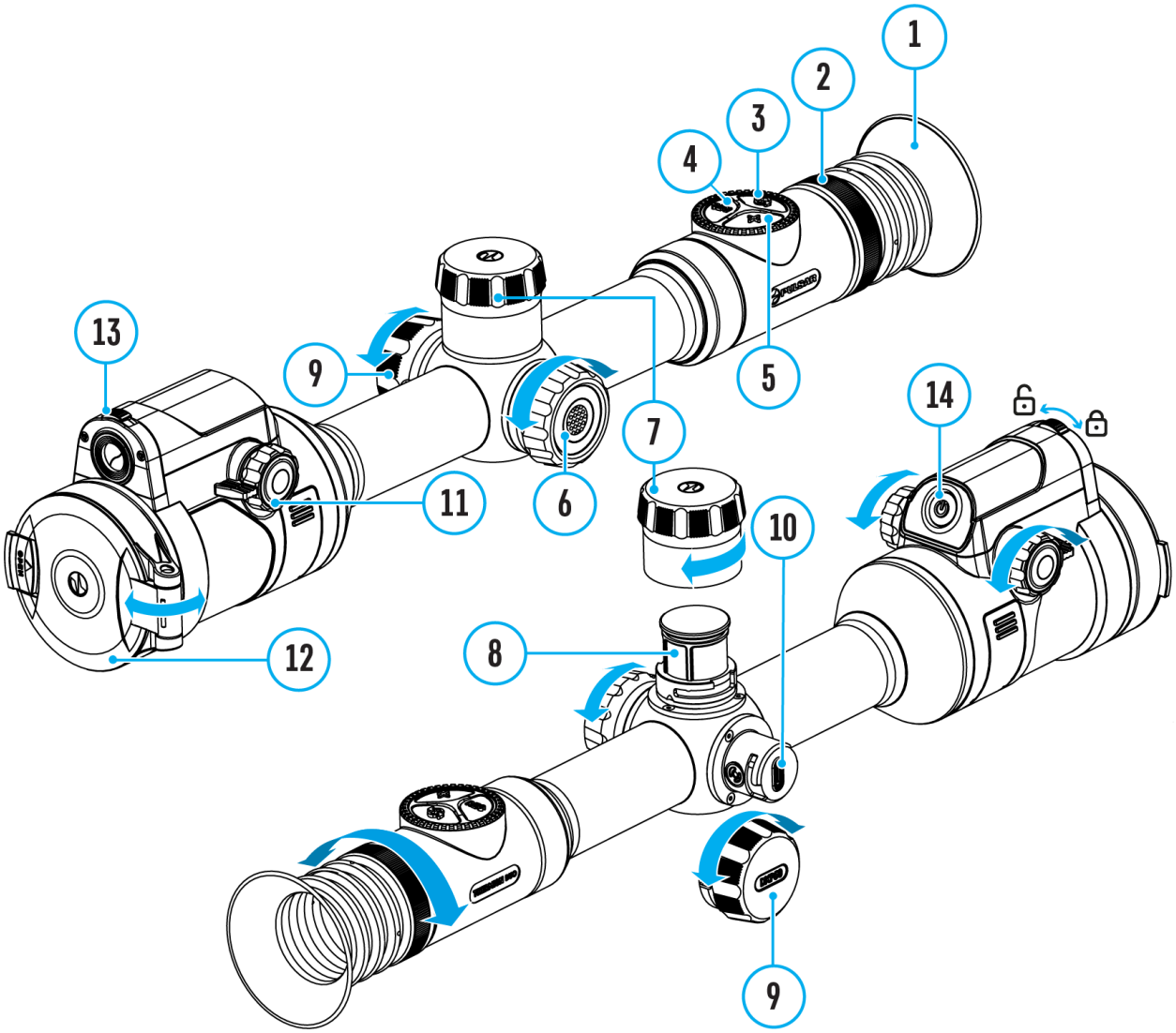

1. Eyecup
2. Eyepiece diopter adjustment ring
3. MODE button
4. REC button
5. ZOOM button
6. Controller
7. Battery compartment cover
8. Battery APS2

9. USB Type-C cover
10. USB Type-C port
11. Thermal channel lens focus knob
12. Thermal channel lens cover
13. Digital channel lens open/close switch
14. ON/OFF button

Features

- 3 modes of operation: thermal imaging, colour digital and multispectral PiP
- 3 levels of sensitivity enhancement for the thermal imaging channel: Normal, High, Ultra
- 3 microbolometer calibration modes: manual, semi-automatic and automatic
- Smooth Digital Zoom
- Multiple reticle options
- Scalable reticles (proportional to Zoom)
- 5 zeroing profiles (10 distances per profile)
- One-shot “Freeze-Zeroing” function
- Precise “Zoom zeroing” (reducing the MOA per click when zooming in)
- 8 colour palettes in thermal imaging mode and multispectral PiP mode
- Pixel repair function
- “Display-Off” function
- Display dimming function
- Auto shutdown function
- Built-in 3-axis accelerometer gyroscope (slope angle indication)
- Stadiametric rangefinder (estimate distance to object)
- Integrated Wi-Fi for remote control and personal device connectivity
- Device firmware update using the free Stream Vision 2 App
- High-strength aluminium alloy housing
- Recoil rated to .375H&H, 9.3x64 and 12-gauge
- Ballistic calculator
- Wireless Remote Control (purchased separately)

Video Recording

- Built-in photo and video recorder with audio
- 16 GB internal memory
- iOS and Android compatible
- Storing photos and videos in Cloud when using the Stream Vision 2 App

Battery Pack

- Built-in 4900 mAh Battery Pack APS5
- Quick-change rechargeable Li-Ion APS2/APS3 battery packs
- Internal and external battery charging via USB Type-C port

Precautions

- Only use the charger supplied with the Battery Pack. The use of any other charger may irreparably damage the Battery Pack or the charger and may cause fire.
- Do not charge the Battery Pack immediately after bringing it from a cold environment to a warm one. Wait for 30-40 minutes for the Battery Pack to get warm.
- It is not recommended to charge the batteries with a charger connected to the USB port of a computer or laptop. It can damage the computer.
- Do not leave the Battery Pack unattended while charging.
- Never use a modified or damaged charger.
- Do not leave the Battery Pack with a charger connected to the power adapter after charging is complete.
- Do not expose the Battery Pack to high temperatures or an open flame.
- Do not submerge the Battery Pack in water.
- Do not connect an external device with a current consumption that exceeds permitted levels.
- Do not dismantle or deform the Battery Pack.
- Do not drop or hit the Battery Pack.
- Keep the Battery Pack out of the reach of children.

Recommendations for Battery Use

- During long-term storage, the Battery Pack should be partially charged – the charge level should be between 50% and 80%.
- Charge the Battery Pack at a temperature from 0° C to +45° C (32° F to +113° F), otherwise the battery life will decrease significantly.
- When using the Battery Pack at sub-zero (sub 32° F) temperatures the battery capacity decreases. This is normal and is not a defect.
- Do not use the Battery Pack at temperatures above those shown in the table – this may decrease battery life.
- The Battery Pack is short circuit protected; however, any situation that may cause short-circuiting should be avoided.

Battery Charging

Thermion Duoriflescopes come with a built-in rechargeable lithium-ion Battery Pack APS5 and a removable rechargeable lithium-ion APS2 Battery Pack. The batteries should be charged before first use.

The icons 1 2 in the status bar will flash when the battery is low. The batteries need to be charged.

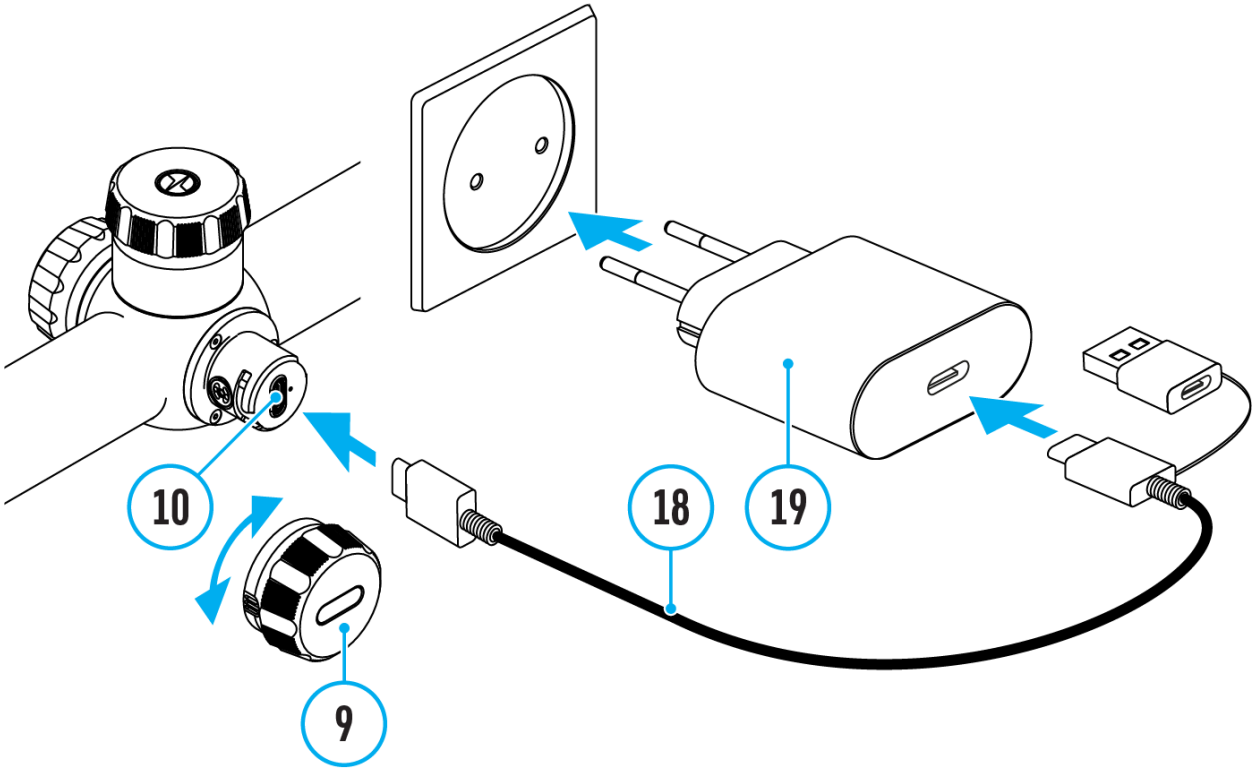

1. Open the USB Type-C cover **(9)** by turning it counterclockwise.
2. Connect the USB Type-C plug of the USB cable **(18)** to the USB Type-C port **(10)** in the body of the riflescope.
3. Connect the second USB plug of the USB cable **(18)** to the USB port on the power adapter **(19)**.
4. Plug the power adapter **(19)** into a 100–240 V socket.
5. Wait until the batteries are fully charged (indication in the status bar: 1 100 2 100).

Attention!When charging rechargeable batteries with a USB Type-C

connector **(10)** in the riflescope body section, charging priority is given to the built-in battery. When the device is off, both batteries are charged at the same time. When using the device, the external battery is discharged first.

The rechargeable lithium-ion APS2 and APS3* Battery Packs may be recharged using the APS** charger.

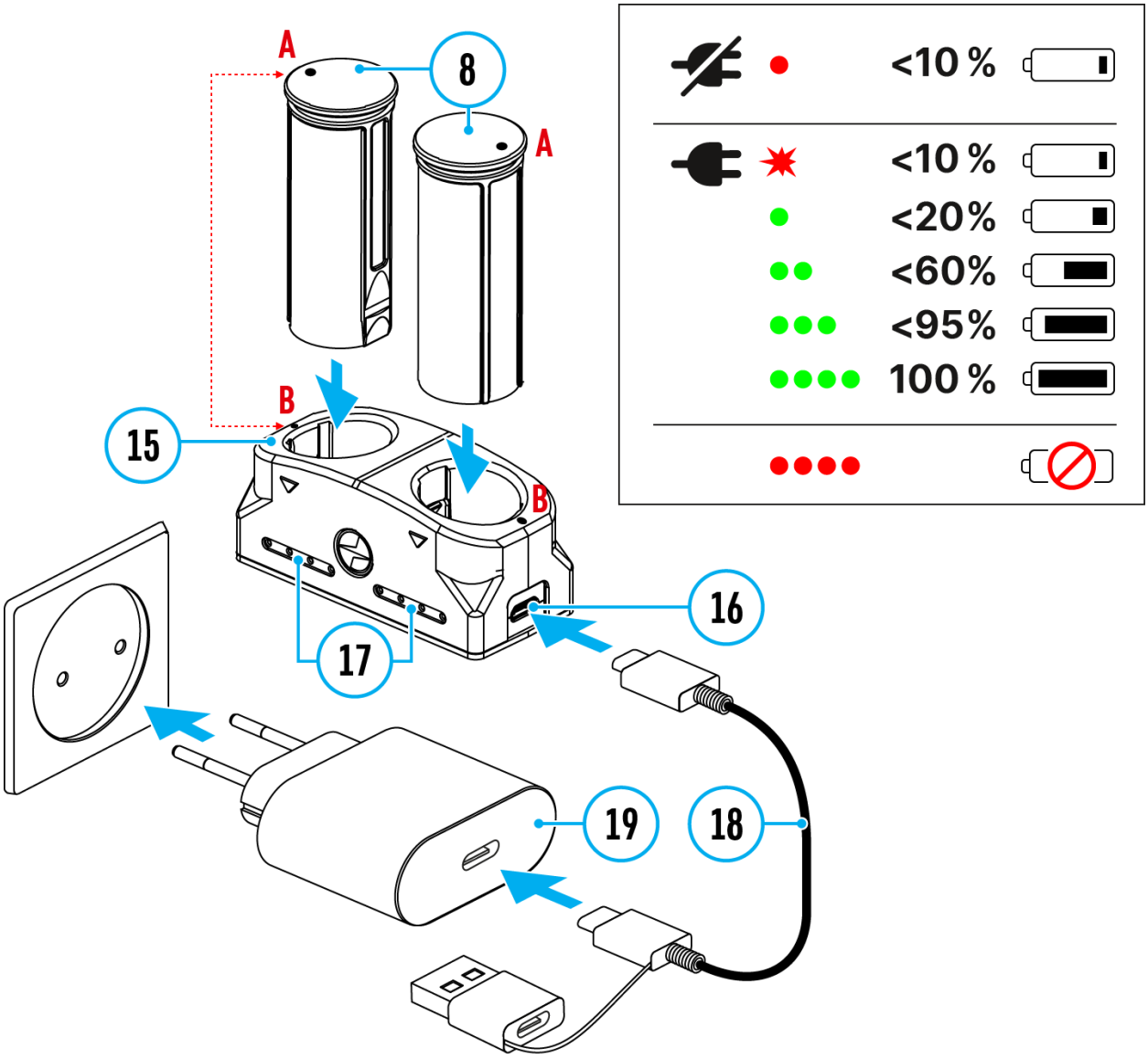

1. Insert the Battery Pack **(8)** along the rail into the APS charger **(15)** slot as far as it will go. The APS charger is supplied with your device or purchased separately.
2. Point **A** on the battery and point **B** on the charger should match.
3. Connect the USB Type-C plug of the USB cable **(18)** to the port **(16)** of the charger **(15)**.
4. Connect the second plug of the USB cable **(18)** to the USB port on the power adapter **(19)**.

5. Plug the power adapter **(19)** into a 100-240 V socket.
6. The LED indicator **(17)** will display battery charge status.
7. Wait until the battery is fully charged (LED indication **(17)**: ●●●●).
8. Two batteries* can be charged at the same time.

(17) LED Indicator* **	**Battery Charge Status**
●	Battery level is from 0% to 10%. Charger is not connected to a power supply.
✸	Battery level is from 0% to 10%. Charger is connected to a power supply.
●	Battery level is from 10% to 20%.
●●	Battery level is from 20% to 60%.
●●●	Battery level is from 60% to 95%.
●●●●	Battery completely charged. Charging will automatically stop. The battery can be disconnected from the charger.
●●●●	Defective battery. Do not use the battery.

* Purchased separately.

** Included in the delivery package.

*** LED indicator displays the current battery charge status for 30 seconds when the APS charger is not plugged in. When the power is being supplied, the indicator is constantly displaying the current battery charge status, the LEDs are additionally flickering to display the battery charging process.

Battery Installation

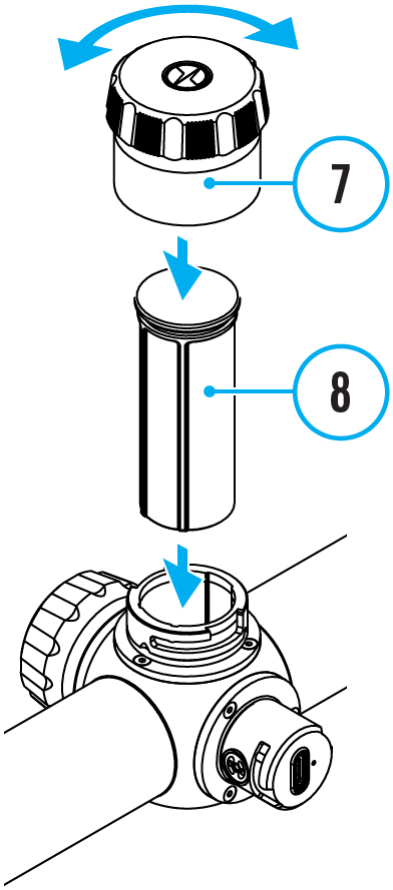

1. Turn the battery cover **(7)** counter clockwise and remove.
2. Install the battery **(8)** into the battery compartment along the special guides in the device casing designed for it.
3. When properly installed, the battery is locked into the slot with a special clip.
4. Close the battery cover **(7)** by turning it clockwise.

Switching and Changing the Batteries

Thermion Duoriflescopes are powered by 2 batteries: built-in Battery Pack APS5 and removable Battery Pack APS3/APS2.

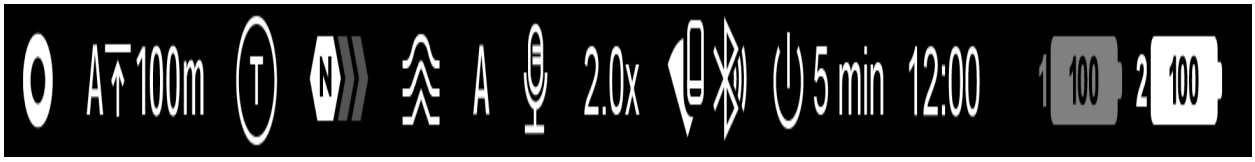

1. If there are two batteries in the device, two battery icons are displayed in the status bar (1 - built-in battery, 2 - removable battery). The device battery is displayed in grey and white; it is grey when inactive.
2. When there is no removable battery in the device, only one icon for the built-in battery displays in white in the status bar.
3. When both batteries are fully charged, the device is powered by the removable battery. If there is low removable battery level, the device will switch to the built-in battery.
4. Battery charge level is displayed in % above the icon in the status bar while charging.
5. It is possible to replace the removable battery even while the device is on.

Attention! When installing a removable battery with a sufficient charge level, the device will automatically switch to it.

External Power Supply

Show device diagram

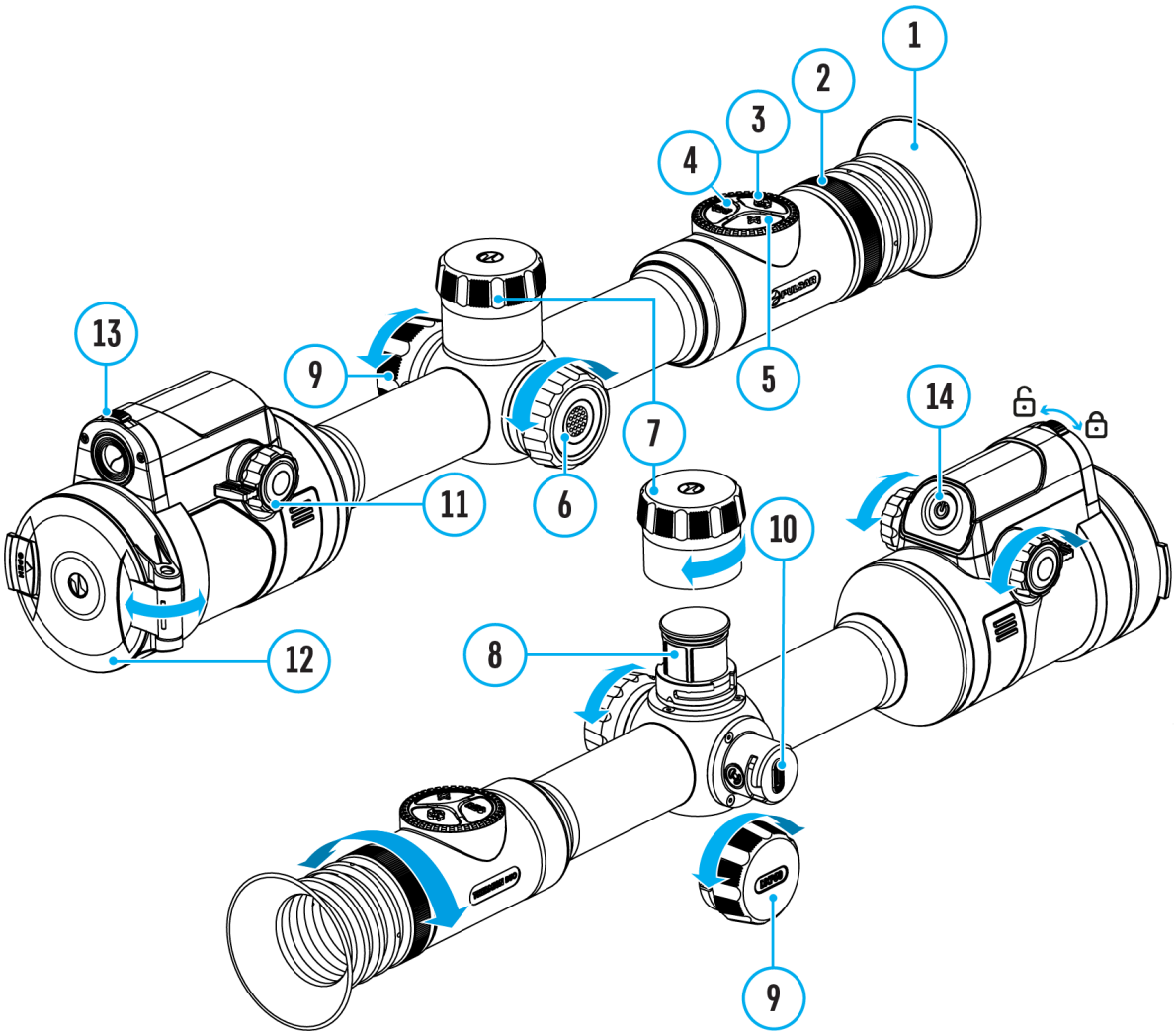

Power can be supplied from an external source such as a 5 V or 9 V power bank.

1. Connect the external power supply to the micro USB Type-C port **(10)** of the riflescope.
2. The riflescope switches to external power source, while built-in Battery Pack APS5 and removable Battery Pack APS2 (or APS3*) will gradually recharge.
3. A rechargeable battery icon 100 indicating a percentage of the

battery life will appear in the status bar.

4. When you turn off external power source, the riflescope switches over to the removable battery without turning off. When there is no removable battery or low power level the device switches to the built-in battery.

* Available separately

Warning! Charging APS2 / APS3 / internal APS5 batteries at air temperatures below 0° C (32° F) may reduce battery life. When using external power, connect the Power Bank to the device after it has been turned on and working for several minutes.

Mounting on the Rifle

Show device diagram

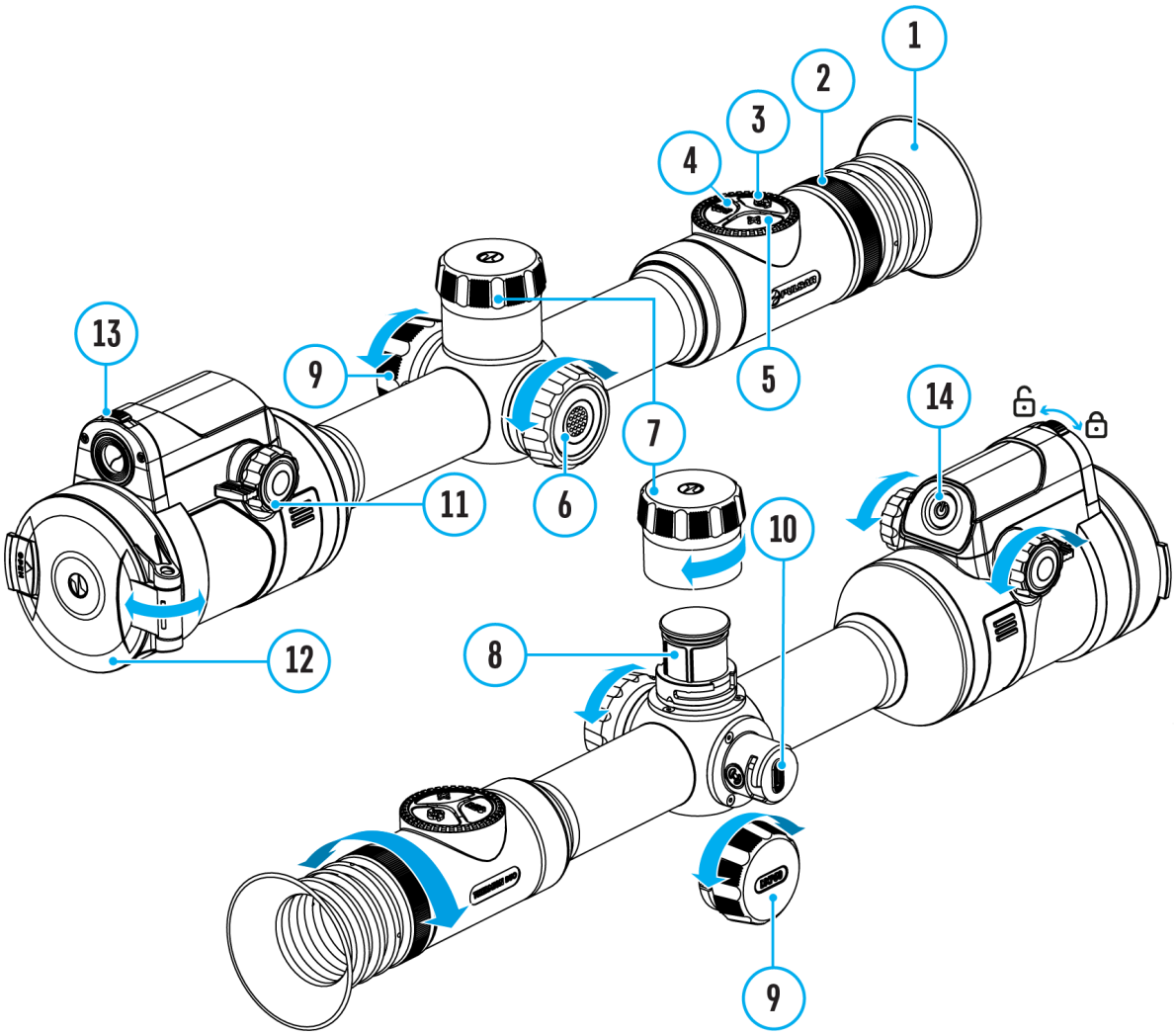

To ensure accurate shooting the **Thermion Duo** riflescope should be properly mounted on the rifle.

- Mount the riflescope with 30mm scope rings or a single-piece scope mount, purchased separately. Use only high-quality mounts and rings compatible with your rifle. Follow the mount manufacturer's installation instructions and use the proper tools.
- When mounting the riflescope, adjust the position of the scope on the rifle to achieve optimal, comfortable eye relief as specified by the **Technical Specifications**. Failure to comply with this recommendation

may result in injury to the shooter.

- Install the riflescope as low as comfortably possible without contacting the barrel or receiver.
- In order to avoid pinching the riflescope body, tighten ring screws to a maximum of 2.5 Nm (22.1 in.-lbs). Using a torque wrench is recommended.
- Using the included eyecup **(1)** is recommended to increase camouflage and avoid detection. The eyecup is mounted on the riflescope's eyepiece via integral magnets.
- Before using the riflescope (especially for hunting), follow instructions in the **How to Zero**section.

Powering on and Image Setting

Show device diagram

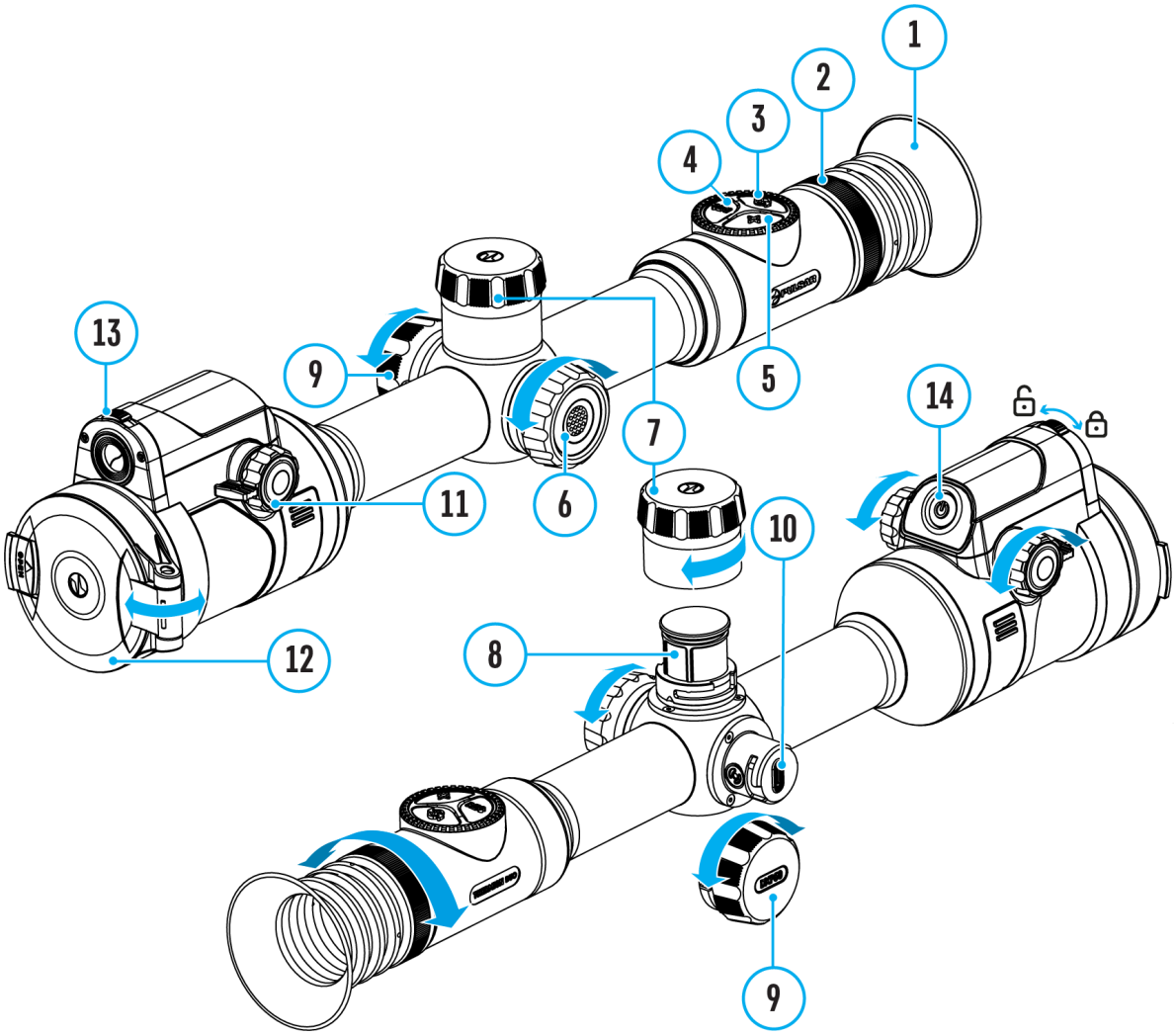

---

1. Open the thermal channel lens cover **(12)**.

2. Open the digital channel lens cover by moving the switch **(13)** to the left.

3. Turn the unit on with a short press of the**ON/OFF (14)** button.

4. Adjust the sharpness of the symbols on the display by rotating the

dioptre adjustment ring of the eyepiece **(2)**.

5. Turn the focus knob of the thermal imaging channel lens **(11)** to focus on the observation object in the thermal imaging mode.

6. Briefly press the **MODE** button **(3)** to select the desired **image mode**: thermal or digital.

7. Long press the **MODE** button **(3)** to activate the PiP multispectral mode. Briefly press the **MODE** button **(3)** to select the image mode of the PiP window: thermal or digital.

8. In thermal imaging and multispectral PiP modes:

- Enter the main menu with a long press of the controller button **(6)** and select the desired **Calibration Mode**: **manual (M), semi-automatic (SA)**or **automatic (A)**.
- Calibrate the thermal image with a short press of the **ON/OFF (14)** button (when calibration mode **SA** or **M** has been selected). Close the thermal channel lens cover before manual calibration.
- Select the required thermal image **amplification level** (**“Normal”** N**, “High”** H**, “Ultra”** U) in the quick menu (activate by briefly pressing the controller button **(6)**; for details, see the **Quick Menu** section).
- Activate the **smoothing filter** in the main menu to improve the thermal image as the amplification level increases.
- Select one of the **colour palettes** for the thermal image in the main menu.

9. Adjust the brightness and contrast of the display in the quick menu.

10. Repeatedly press the **ZOOM (5)** button to change the magnification ratio of the riflescope. While the magnifying glass icon is visible on the screen, rotate the controller ring**(6)**for smooth digital zooming from the current magnification.

11. Power the device off with a long press of the **ON/OFF (14)** button.

Observation conditions: time of day, weather, different observation objects affect the image quality. Custom settings for brightness, display contrast as well as the function of adjusting the microbolometer sensitivity level will

help to achieve the desired quality in a particular situation.

Warning! Never point the lens at intensive energy sources such as laser radiation emitting devices or the sun. It can damage electronic components in the device. The warranty does not cover damage arising from failure to comply with operating instructions.

Button Operation

Operation	Button
Power device on	short press
Power device off	long press for 3 secs
Turn display off	long press for less than 3 secs
Turn display on	short press
Calibrate the microbolometer (in thermal imaging and multispectral PiP modes)	short press
Disable SPOA of **ballistic calculator**	double press
Control discrete digital zoom	short press
Smooth Zooming	rotation
PiP on/off (in thermal and digital modes)	long press
Image modes switching (thermal/digital)	short press
PiP multispectral mode activation	long press
PiP window image mode switching (thermal/digital)	short press
Video Recorder	**Button**
Start/pause/resume video recording	REC short press
Stop video recording	REC long press
Switch to video / photo mode	REC long press

Capture Photo	REC short press
Main Menu	**Button**
Enter main menu	long press
Navigation through menu	rotation
Enter menu items	short press
Confirm value	short press
Exit menu items	long press
Exit main menu	long press
Quick Menu	**Button**
Enter quick menu	short press
Switch between quick menu options	short press
Parameter change	rotation
Exit quick menu	long press

How to Zero

https://www.youtube.com/embed/4rguiFOiNYM?si=lpp4ZrGC12ryVgPz

Show device diagram

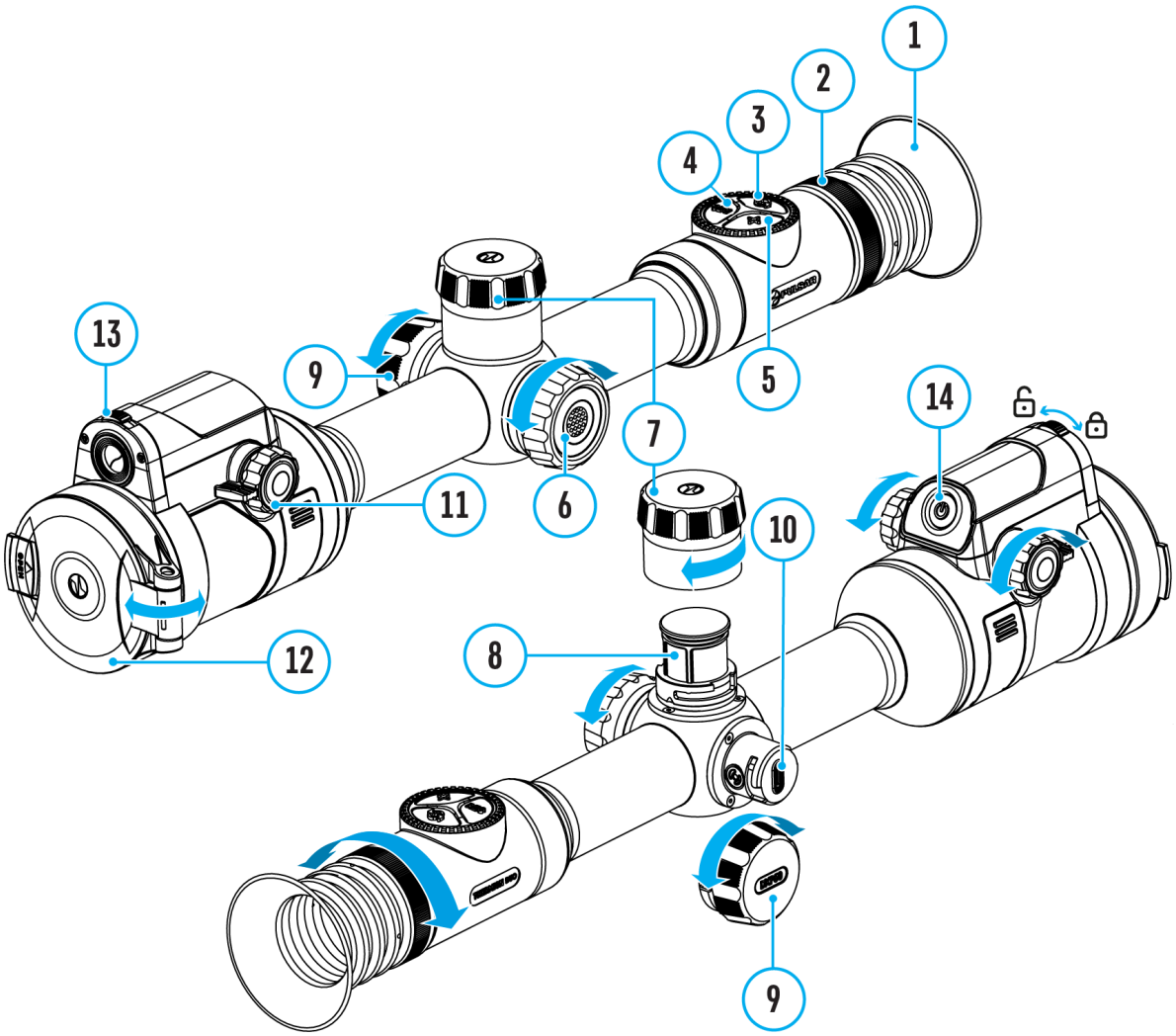

Zeroing at a temperature close to the riflescope’s operating temperature is recommended.

Digital and thermal imaging channels need to be zeroed separately. Before

zeroing, briefly press the **MODE (3)** button in the main window to set the image mode (thermal imaging or digital) for which you want to zero the riflescope.

If the selected channel is not zeroed, the status bar will show icons:

- Digital channel is not zeroed.

- Thermal imaging channel is not zeroed.

Step 1. Take a shot

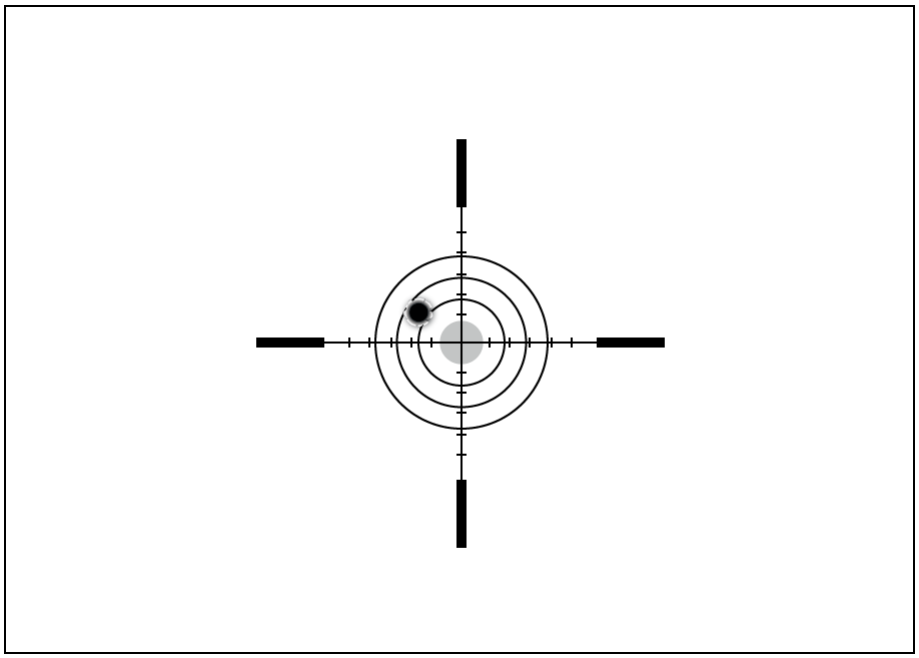

1. Shooting from a benchrest is recommended.

2. Set a target at a known distance.

3. Adjust the riflescope according to the **Powering on and Image Setting** section.

4. Select the zeroing profile (see **Reticle & Zeroing** **->** **Zeroing Profile** main menu item)

5. Point the rifle at the center of the target and shoot.

Step 2. Align the reticle with the point of impact

1. Press and hold the controller button **(6)** to enter the main menu.

2. Add the distance you are aiming at (e.g. 100 meters):**Reticle & Zeroing** **->Add New Distance**. Select the value for each distance digit by rotating the controller ring **(6)**. Press the controller button **(6)** briefly to switch between digits. After setting the required distance, press and hold the controller button **(6)** to save it.

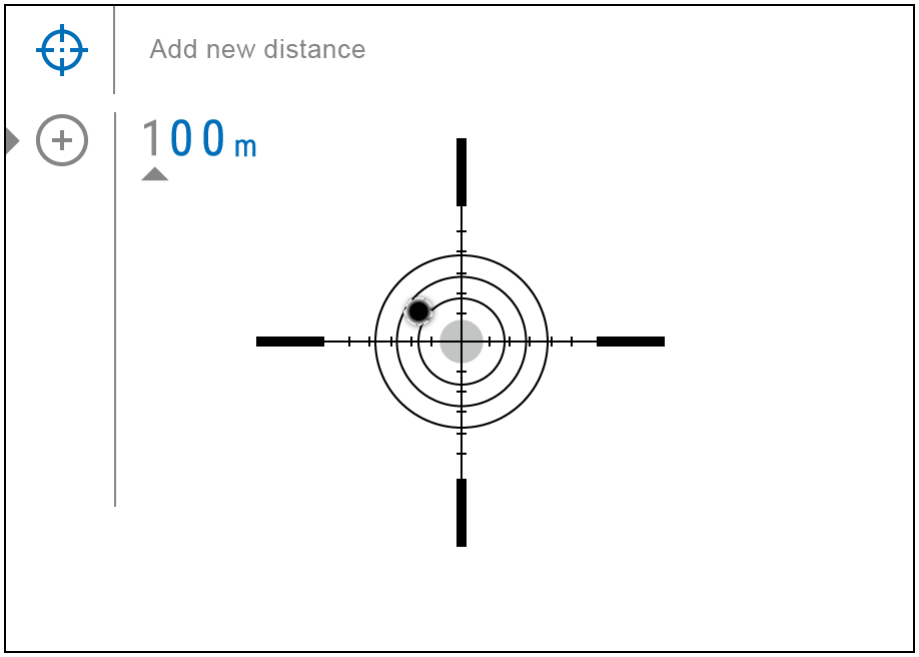

3. After adding the distance, it will switch to the **Zeroing parameters settings** menu. An auxiliary cross will appear in the center of the display, and X and Y coordinates of the auxiliary cross will appear in the upper right corner.

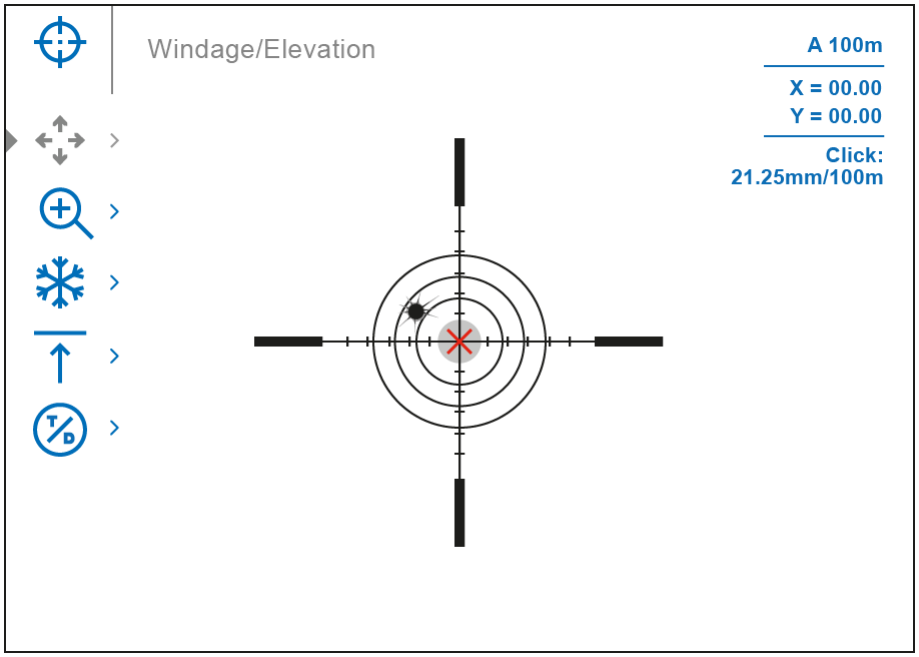

4. Press the controller button **(6)** briefly to enter the **Windage/Elevation** submenu.

5. While holding the reticle at the aiming point, move the auxiliary cross until it is aligned with the impact point by rotating the controller ring **(6)**.

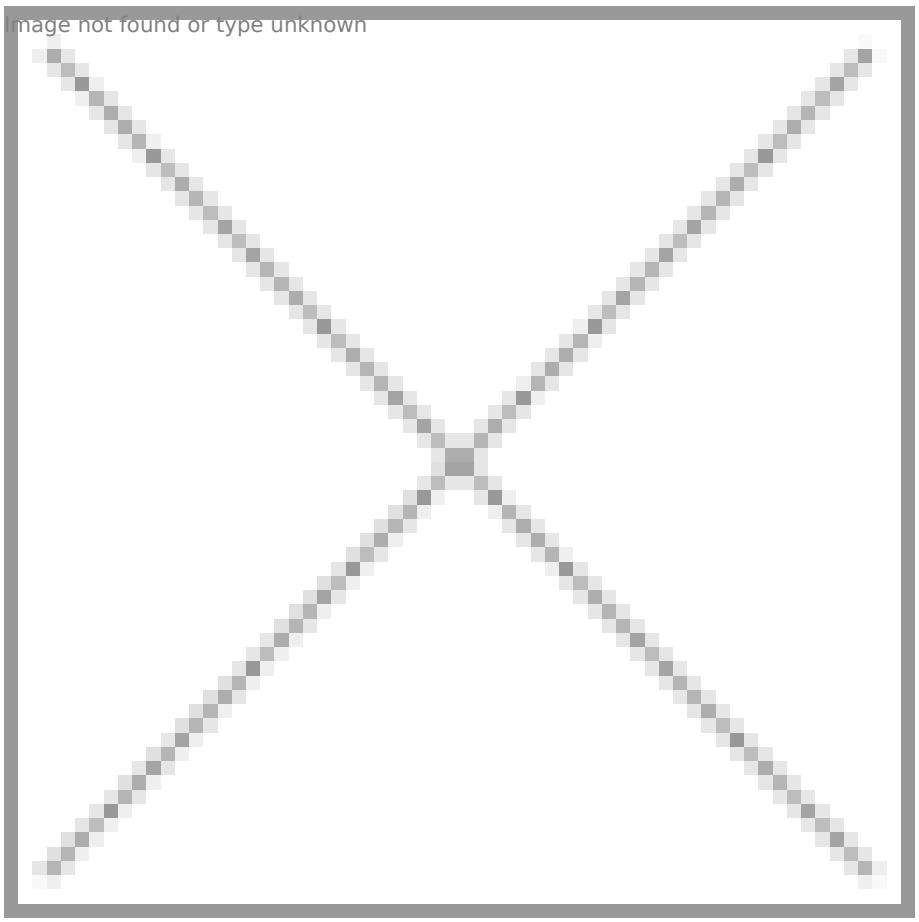

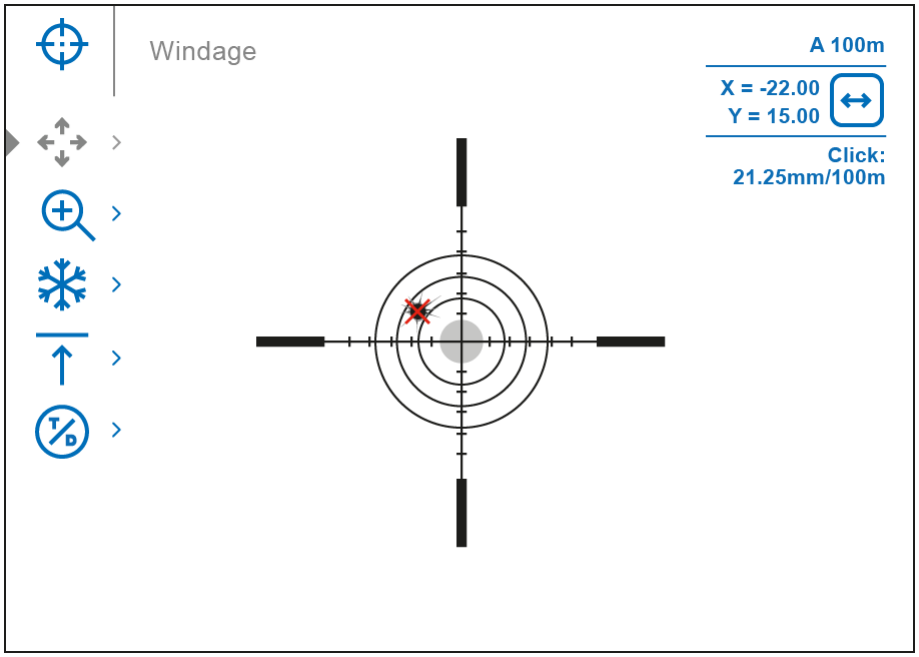

6. To change the direction of the auxiliary cross movement from horizontal to vertical, press the controller button **(6)** briefly.

Zoom Zeroing function:

To improve the accuracy of zeroing, you can change the magnification in the menu . The larger the magnification, the smaller the step of shifting the reticle on the display relative to the image.

Model	**DXP50**	**DXP55**	
		Thermal imaging channel	Digital channel
Click value, mm@100 m – when magnifying, x	21.3 mm – 2x 10.7 mm – 4x 5.3 mm – 8x 2.7 mm – 16x	21.3 mm – 2x 10.7 mm – 4x 5.3 mm – 8x 2.7 mm – 16x	10.3 mm – 4x 5.2 mm – 8x 2.6 mm – 16x 1.3 mm – 32x

One-shot "Freeze Zeroing" function:

Using the **Freeze** function allows you to make adjustments without the need to hold the rifle precisely at the initial aiming point – freezing the zeroing screen (refer to **Reticle & Zeroing** menu item => **Distance** submenu => **Zeroing Parameters Settings** submenu => **Freeze** submenu or short pressing of the **ON/OFF (14)/REC (4)** button (depending on the firmware version). The image will “freeze” and the icon will appear.

Step 3. Save the coordinates

1. Press and hold the controller button **(6)** to save a new position for the reticle. The reticle will be aligned with the impact point and it will exit the **Windage/Elevation** submenu.

2. Select the menu item and briefly press the controller button **(6)** or briefly press the **MODE (3)** button to select another image channel (thermal or digital) and repeat the zeroing procedure for it.

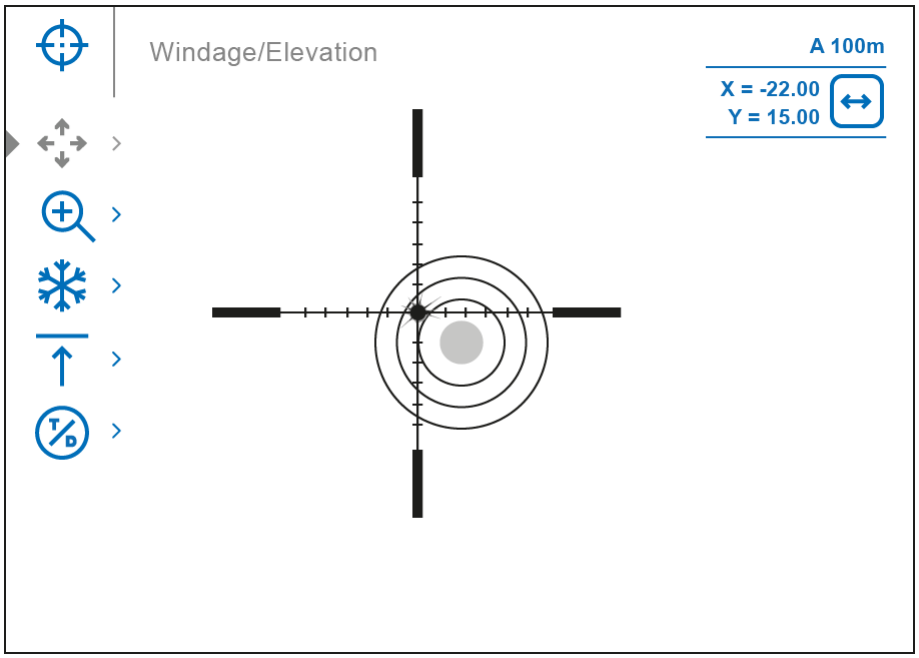

3. The coordinates for the digital and thermal channels will be saved under the same distance name. Zeroed channels are displayed in the status bar with icons (D) and (T).

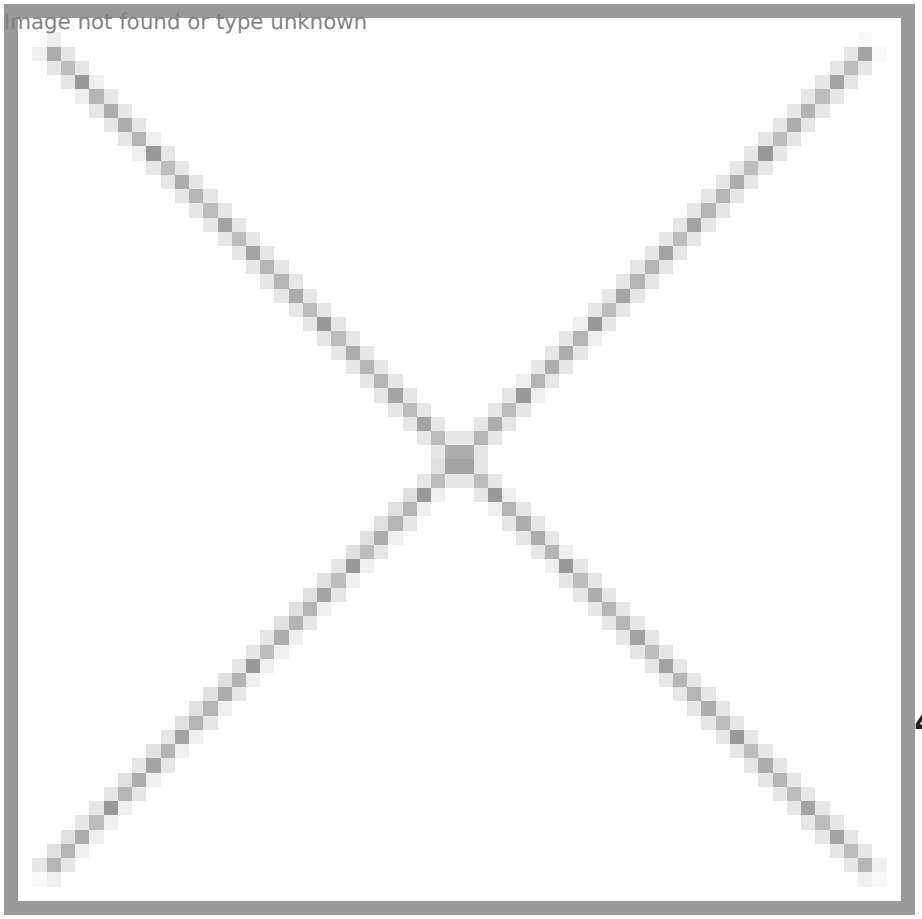

4. Press and hold the controller button **(6)** again to exit the zeroing settings menu - a message will appear confirming the successful operation.

If one channel was not zeroed when exiting the zeroing menu, a window will appear asking you to zero the other channel:

- Select "Yes" to return to the zeroing screen and zero in another channel.
- Select "No" to exit the zeroing screen to the riflescope settings menu.

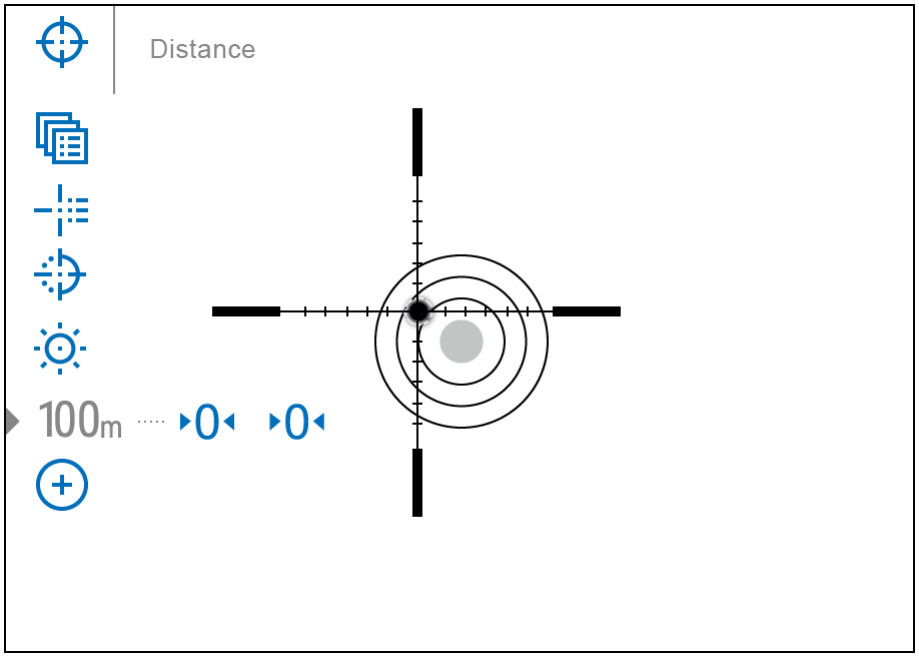

5. Fire a second shot - now the point of impact and the aiming point must be matched.

Notes:

- After zeroing, the reticle may not be in the center of the display.
- The range of movement of the riflescope reticle allows you to successfully zero the riflescope, even on mounts that are far from ideal, minimizing the possible disadvantages of the mounts. The better the mount is installed, the less you have to move the reticle. We recommend mounting the riflescope as low as possible.

Add New Distance

Show device diagram

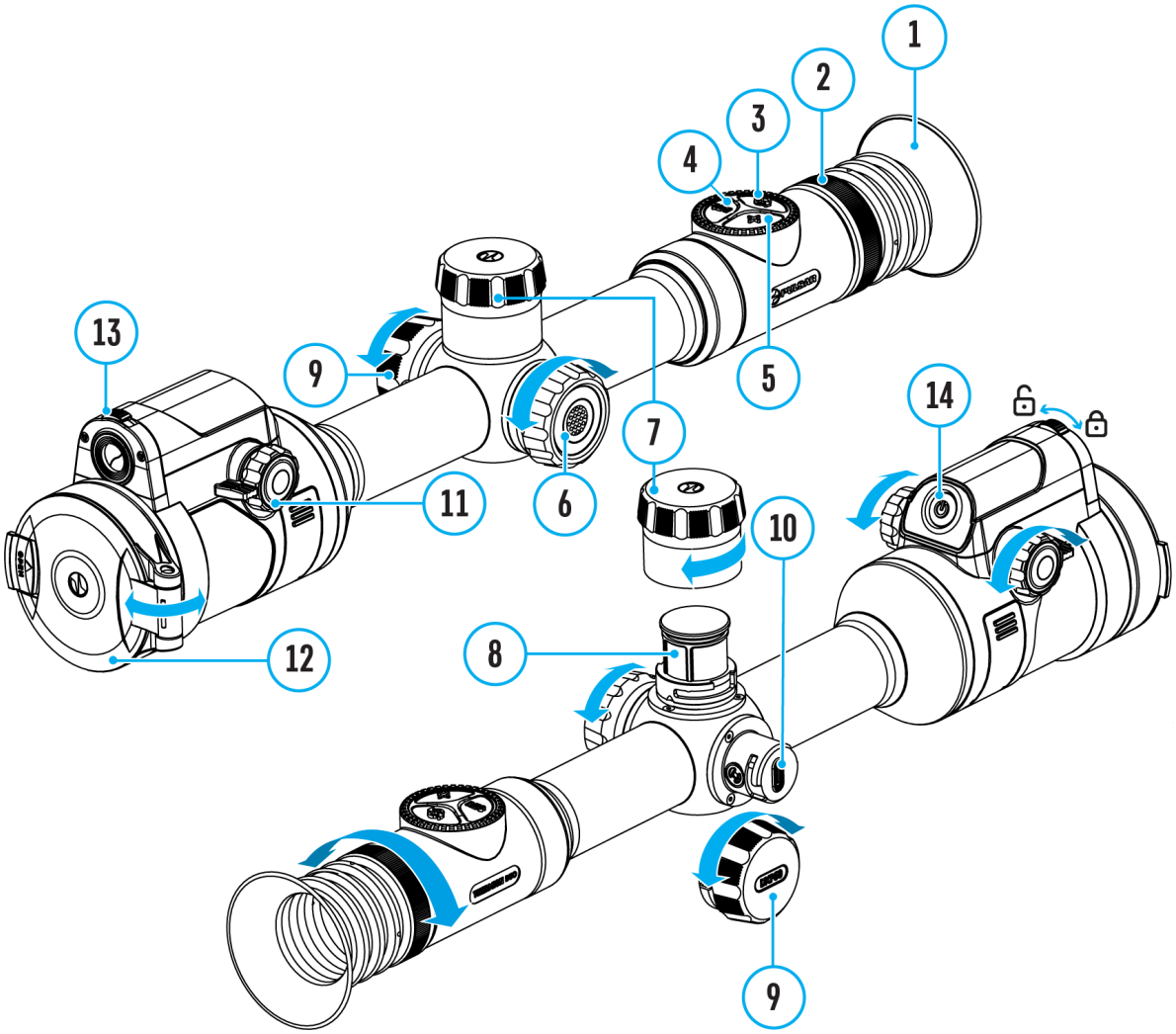

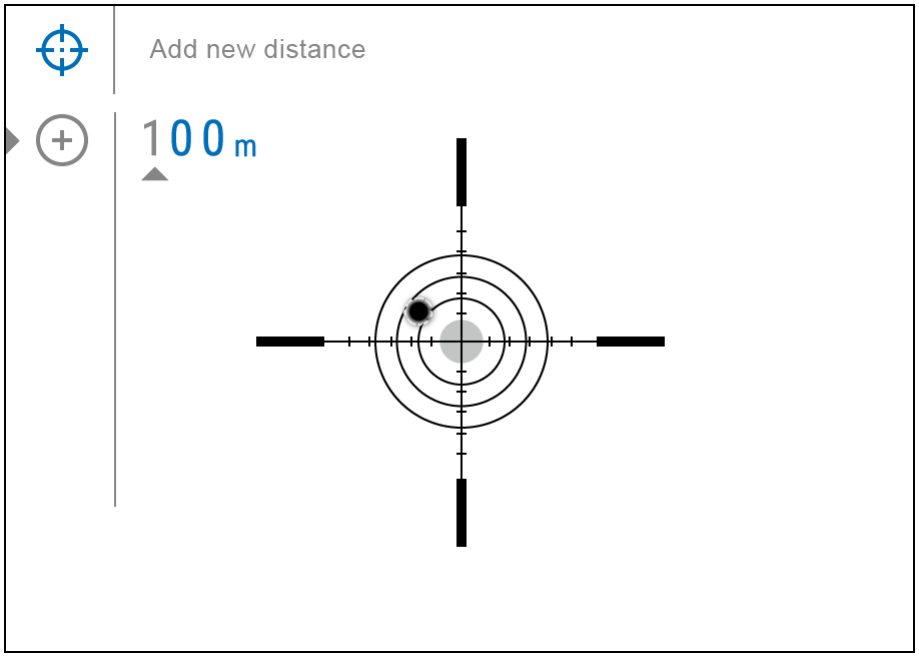

To zero your riflescope, you need to set a zeroing distance first in the range of 1 to 910 m (955 yards).

1. Press and hold the controller button **(6)** to enter the main menu.
2. Rotate the controller ring **(6)** to select the **Reticle & Zeroing** Image not found or type menu item.
3. Press the controller button **(6)** briefly to enter the Reticle & Zeroing submenu.
4. Rotate the controller ring **(6)** to select **Add New Distance** menu item.
5. Press the controller button **(6)** briefly to enter the submenu.
6. Rotate the controller ring **(6)** to select a value for each digit. Press the controller button **(6)** briefly to switch between digits 150 m Image not found or type unknown .
7. Having set the desired distance, press and hold the controller button **(6)** to save it.

The distance you set first becomes a **primary distance** – shown with the 0 icon on the right of the distance value.

Note: Maximum number of zeroing distances is 10 for each profile.

Zeroing Parameters Settings

Show device diagram

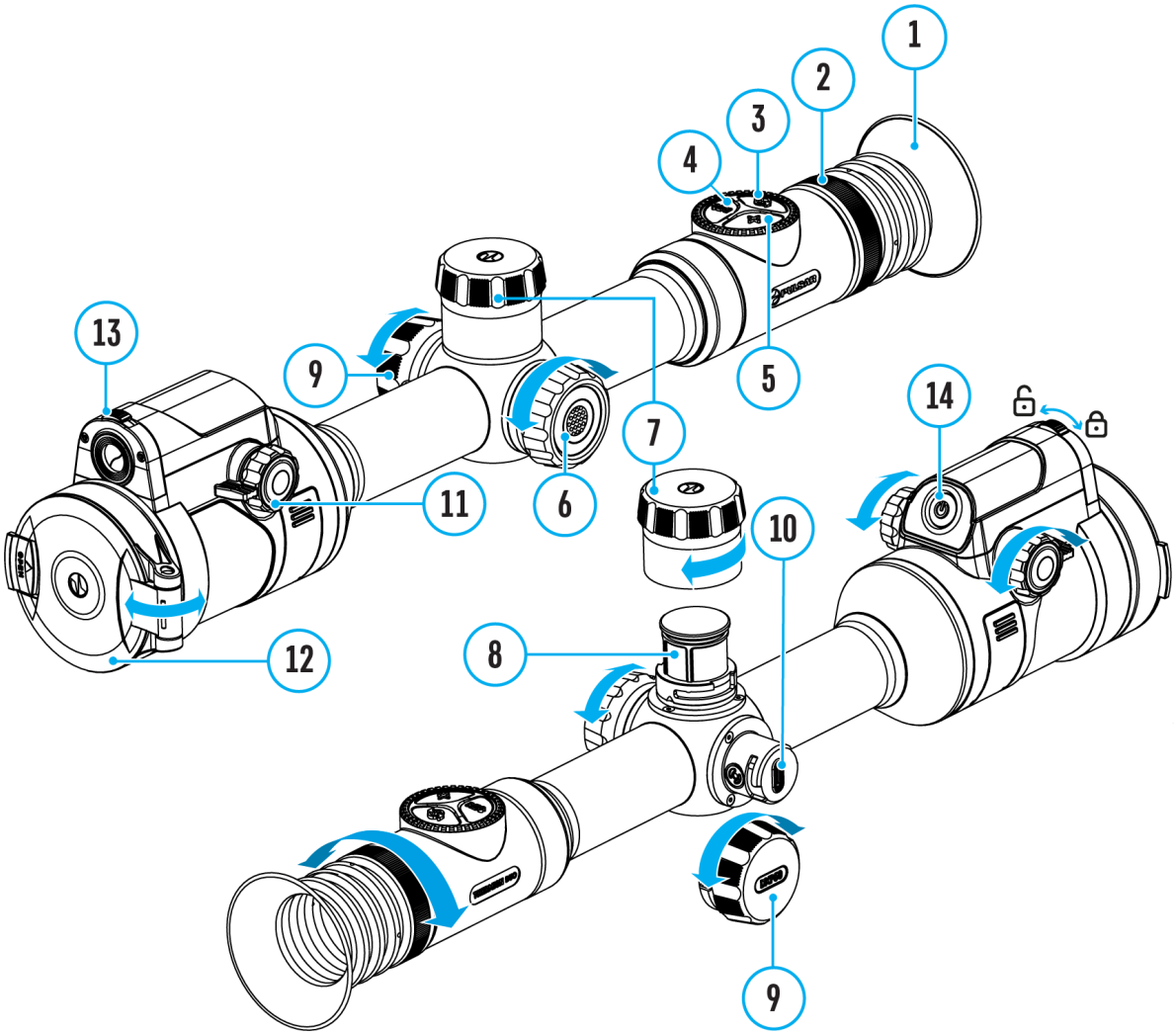

---

1. Press and hold the controller button **(6)** to enter the main menu.
2. Rotate the controller ring **(6)** to select **Reticle & Zeroing** in the menu. Briefly press the controller button **(6)** to select it. Zeroed

Image not found or type unknown

distances are displayed below.

3. The values (e.g., +7.0 -15.0) shown on the right of the distance values, stand for the number of clicks along the Y axis for digital and thermal channels, at which the reticle position at other distances differs from the reticle position in the primary distance. Icons and indicate that the channels have not been zeroed.
4. To zero at any distance again, rotate the controller ring **(6)** to select the required distance and briefly press the controller button **(6)**.
5. Rotate the controller ring **(6)** to select the **Zeroing Parameters Settings** and enter by briefly pressing the controller button **(6)**.
6. **Zeroing** screen, which allows the change of zeroing coordinates, will appear:

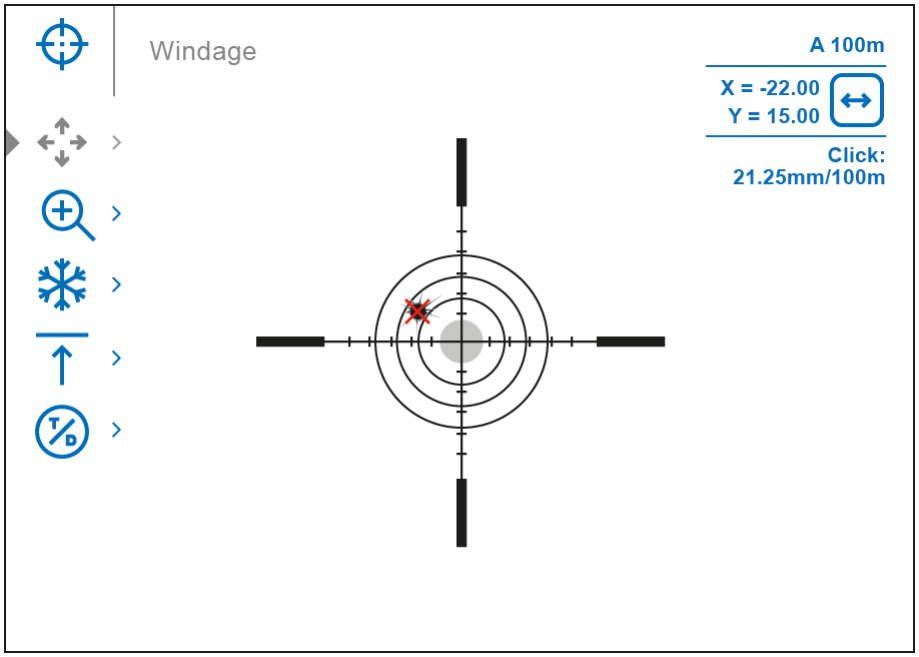

Windage/Elevation

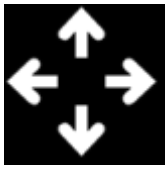

Adjust the reticle position through the **Windage/Elevation** submenu in **Zeroing Parameters Settings** **.**For more information, see the **How to Zero**section.

Magnification (when Zeroing)

Show device diagram

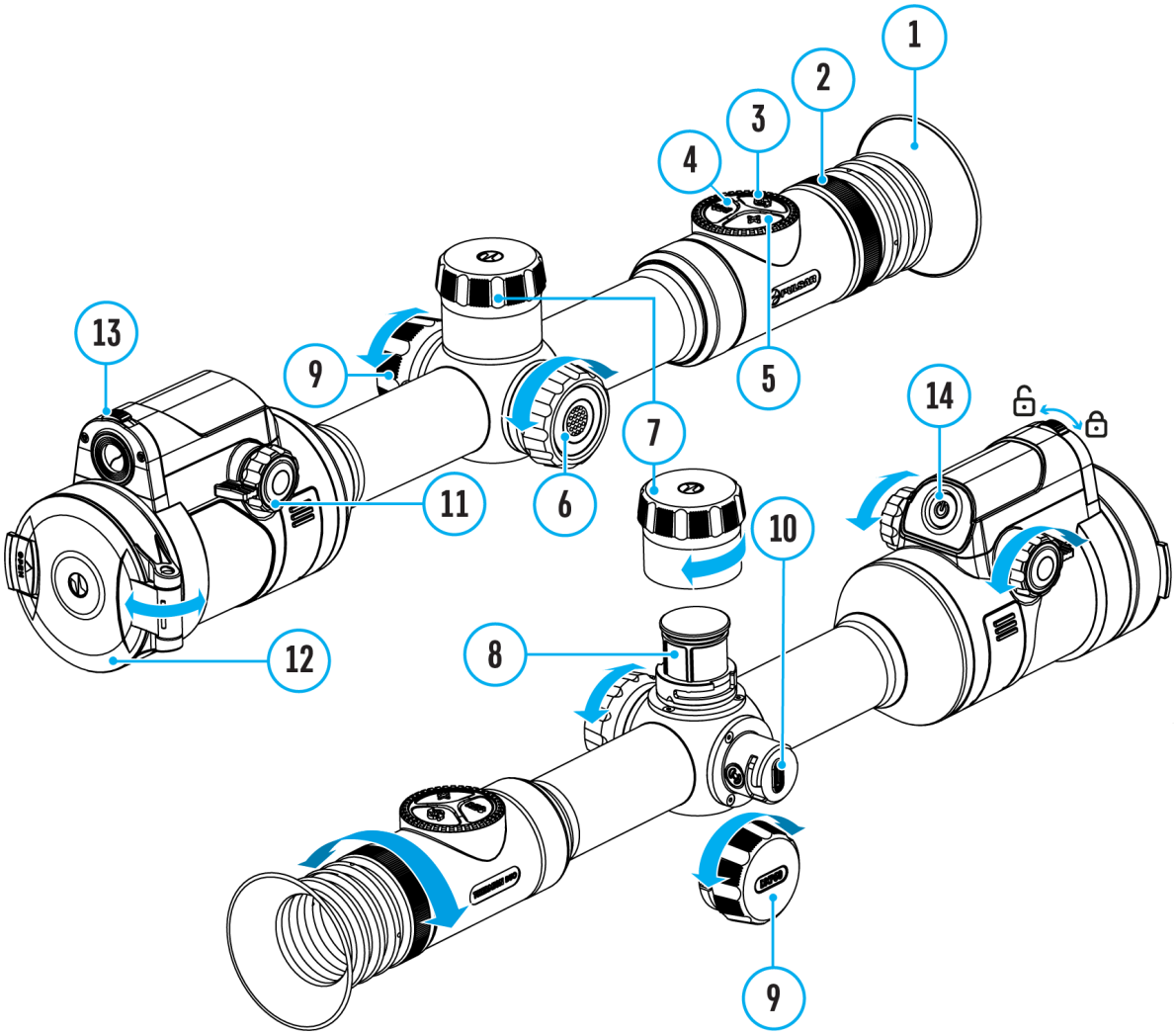

Magnification allows you to magnify via the device’s digital zoom when zeroing, which reduces the MOA-per-click values of adjustments and improves zeroing accuracy.

1. In the **Zeroing Parameters Settings** menu, rotate the controller ring**(6)** to select the **Magnification** submenu item and enter by briefly pressing the controller button **(6)**.

2. Rotate the controller ring **(6)** to select a digital magnification value of the riflescope (e.g., x4).

Model	**DXP50**	**DXP55**	
Click value, mm@100 m – when magnifying, x	21.3 – 2x 10.7 – 4x 5.3 – 8x 2.7 – 16x	Thermal imaging channel	Digital channel
		21.3 – 2x 10.7 – 4x 5.3 – 8x 2.7 – 16x	10.3 – 4x 5.2 – 8x 2.6 – 16x 1.3 – 32x

3. Press the controller button **(6)** briefly to confirm your selection.

Freeze

Show device diagram

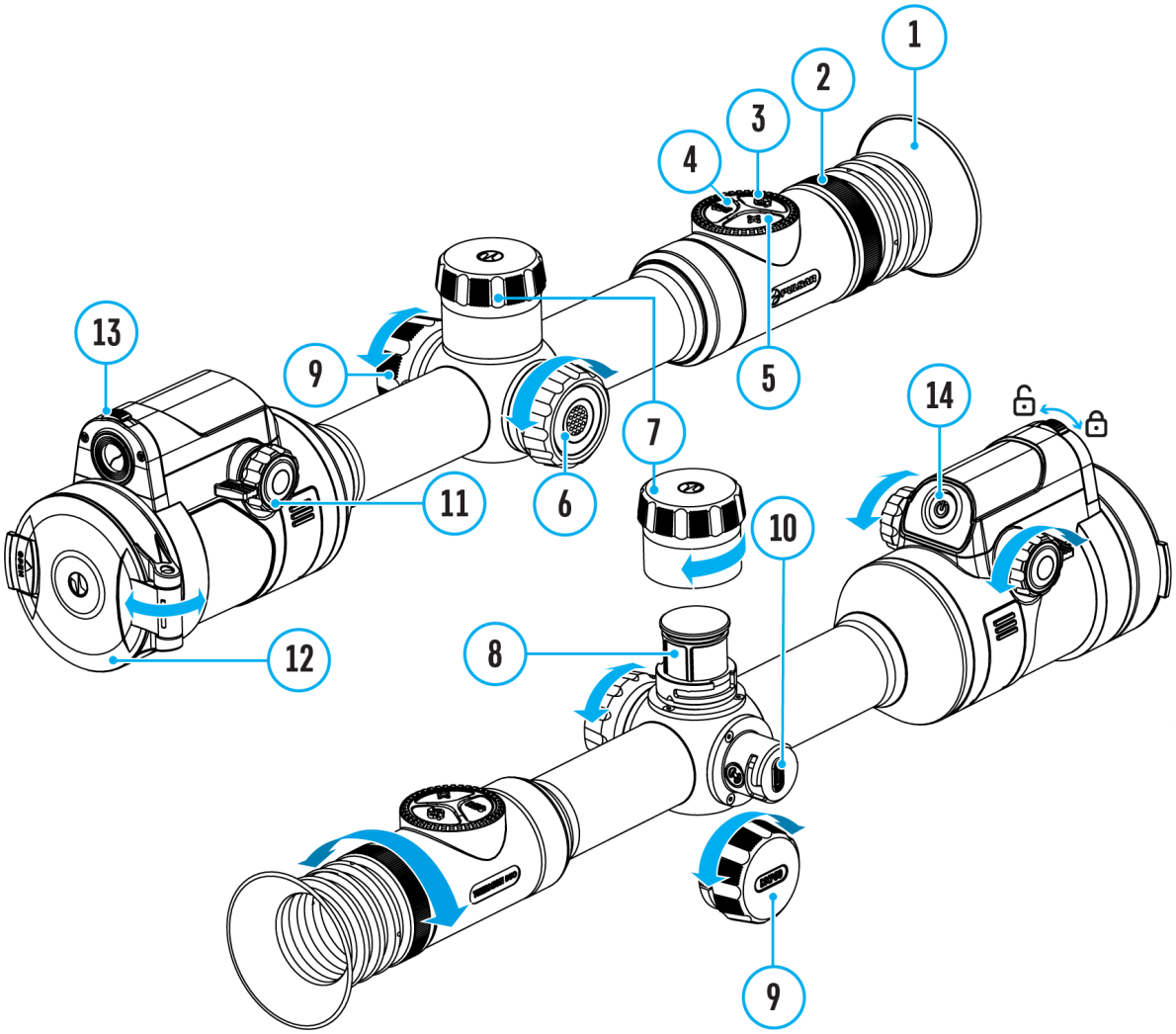

The “freeze” function allows the user to adjust the reticle on a still image while manipulating the rifle.

1. In the **Zeroing Parameters Settings** menu, rotate the controller ring**(6)** to move the cursor to the **Freeze** function.
2. Align the reticle with the point of aiming and press the controller **(6)** or **ON/OFF (14)/REC (4)**

button (depending on the firmware version). A screenshot will be taken, an icon Image not found or type unknown will appear.

3. Go to the additional **Windage/Elevation** Image not found or type unknown submenu and adjust the position of the reticle (see the **How to Zero** section).
4. Select the **Freeze** Image not found or type unknown submenu item again and briefly press the controller **(6)** or **ON/OFF(14)** button - the image will “unfreeze”.

Name Distance

Show device diagram

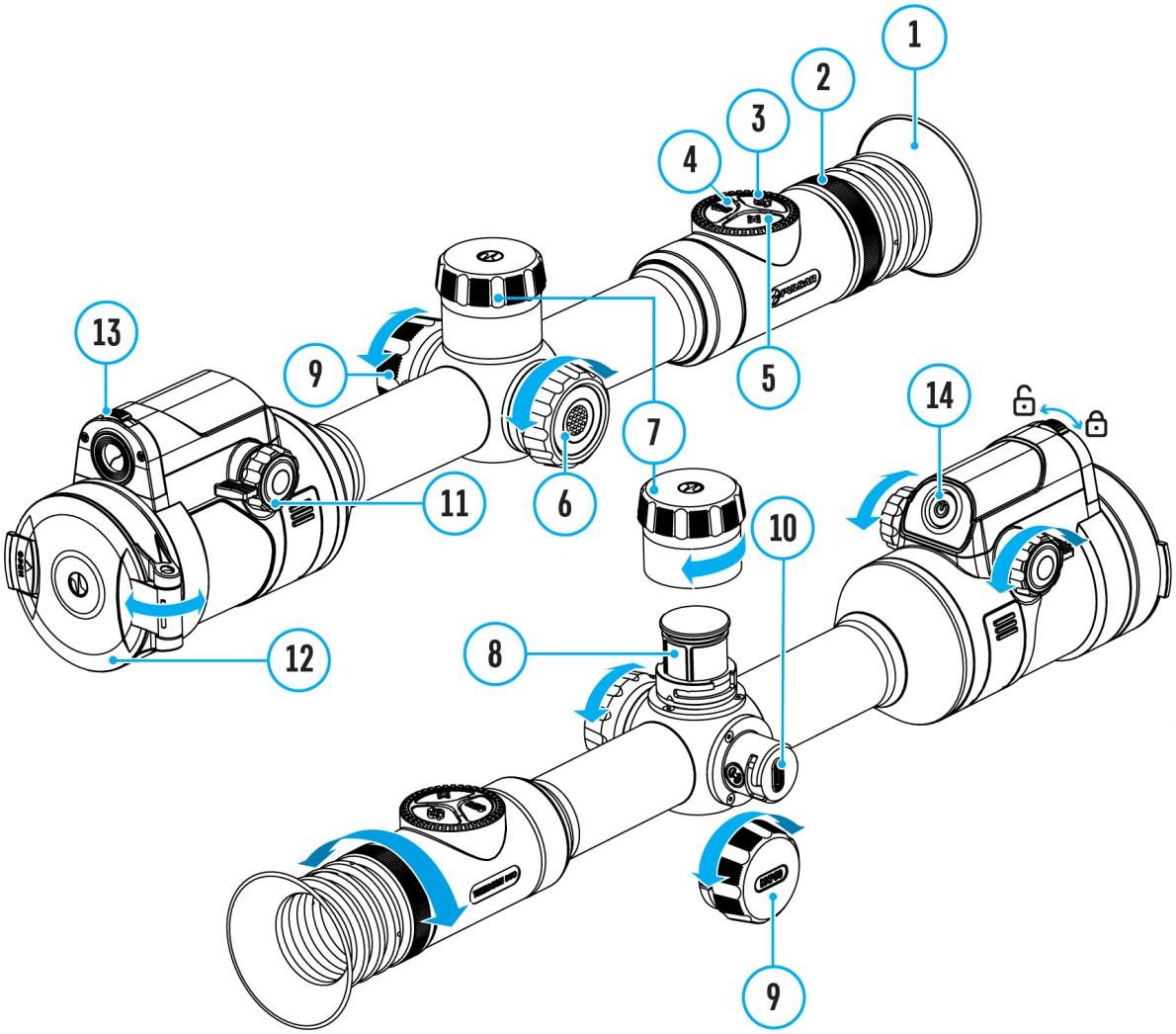

1. In the **Zeroing Parameters Settings** menu, rotate the controller ring **(6)** to select the **Name Distance** Image not found or type unknown submenu item and enter it by briefly pressing the controller button **(6)**.
2. Rotate the controller ring**(6)** to select a value for each digit. Press the controller button **(6)** briefly to switch between digits.

3. Press and hold the controller button **(6)** to confirm the selection.

Thermal/Digital channel selection

Show device diagram

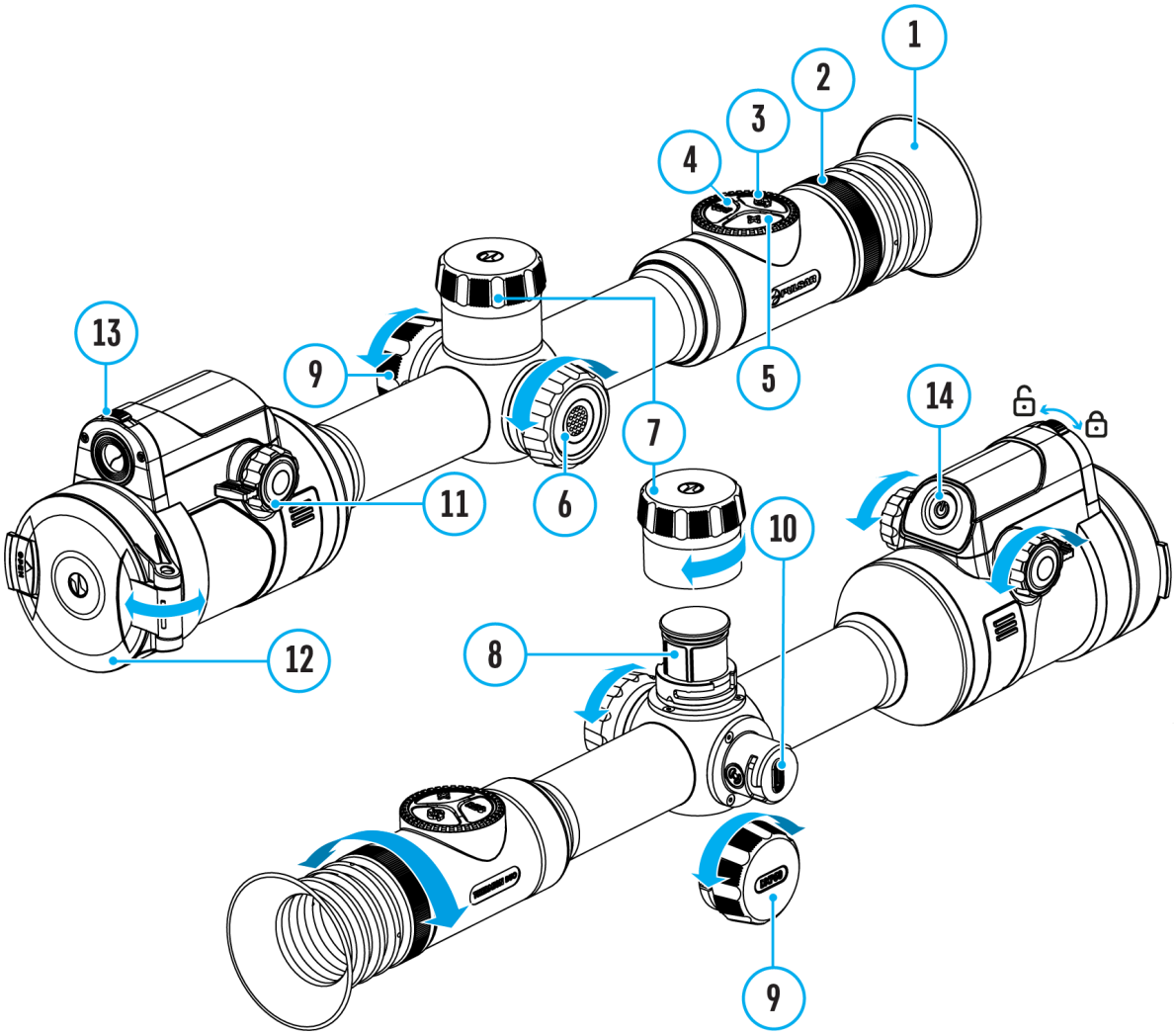

---

1. In the **Zeroing Parameters Settings** menu, rotate the controller ring **(6)** to select the **Thermal/Digital Channel Selection** Imag found or type unknown menu item.

2. Briefly press the controller button **(6)** to select the image channel (thermal imaging or digital) to be zeroed.

Note: the image channel switching is also possible by briefly pressing the **MODE**button **(3)**.

Change Primary Distance

Show device diagram

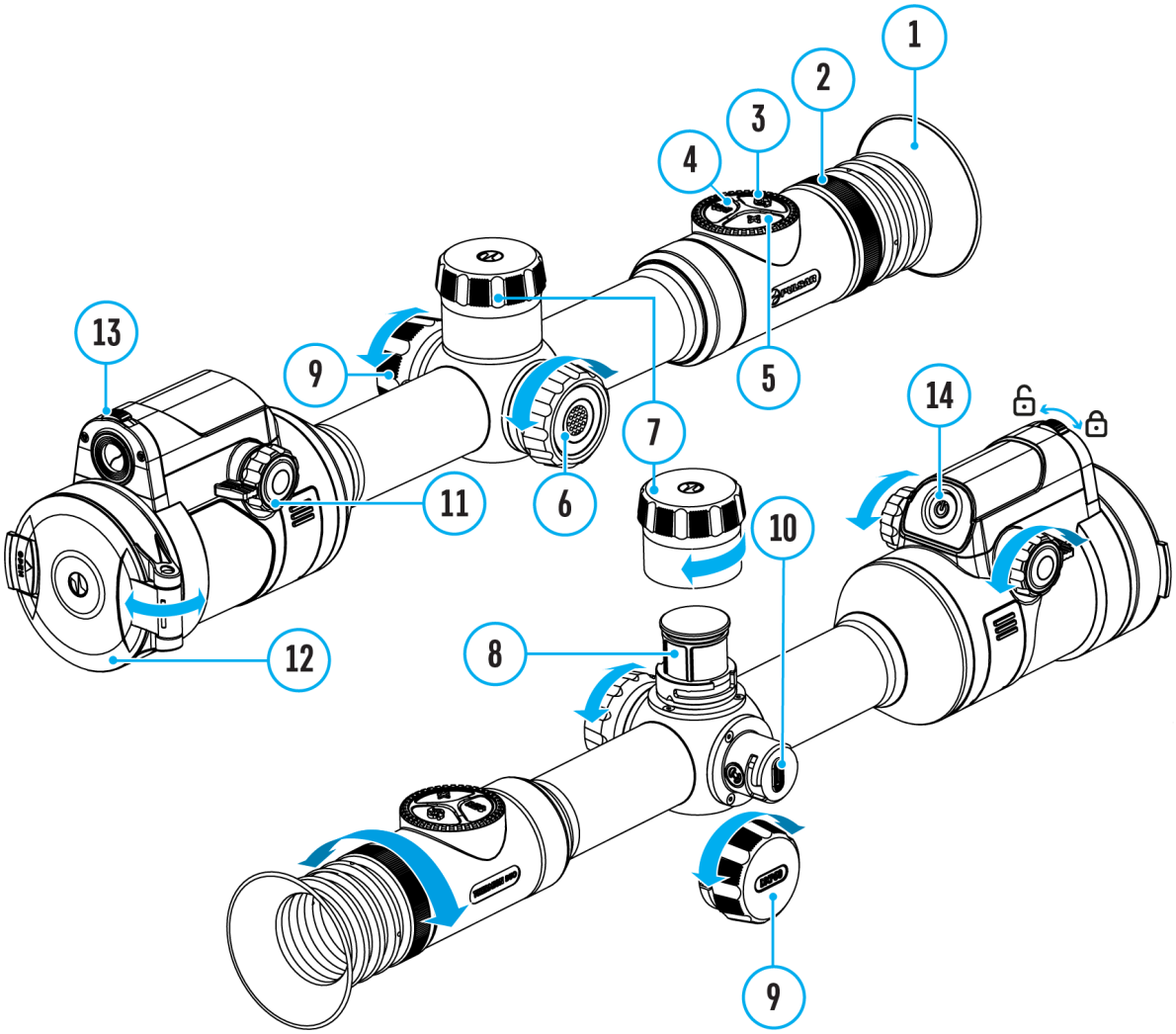

---

1. Press and hold the controller button **(6)** to enter the main menu.
2. Rotate the controller ring **(6)** to select the **Reticle & Zeroing** Image not found or type unl menu item and enter by briefly pressing the controller button **(6)** – zeroed distances are displayed at the bottom.
3. Select a non-primary distance and enter the submenu for operating the

distance with a brief press of the controller button**(6)**.

4. Select **Change Primary Distance** item.
5. Press the controller button **(6)** briefly.
6. Icon next to the selected distance confirms the change of primary distance.

There will also be a recalculation of corrections in clicks for other distances relative to the new primary distance.

Delete Distance

Show device diagram

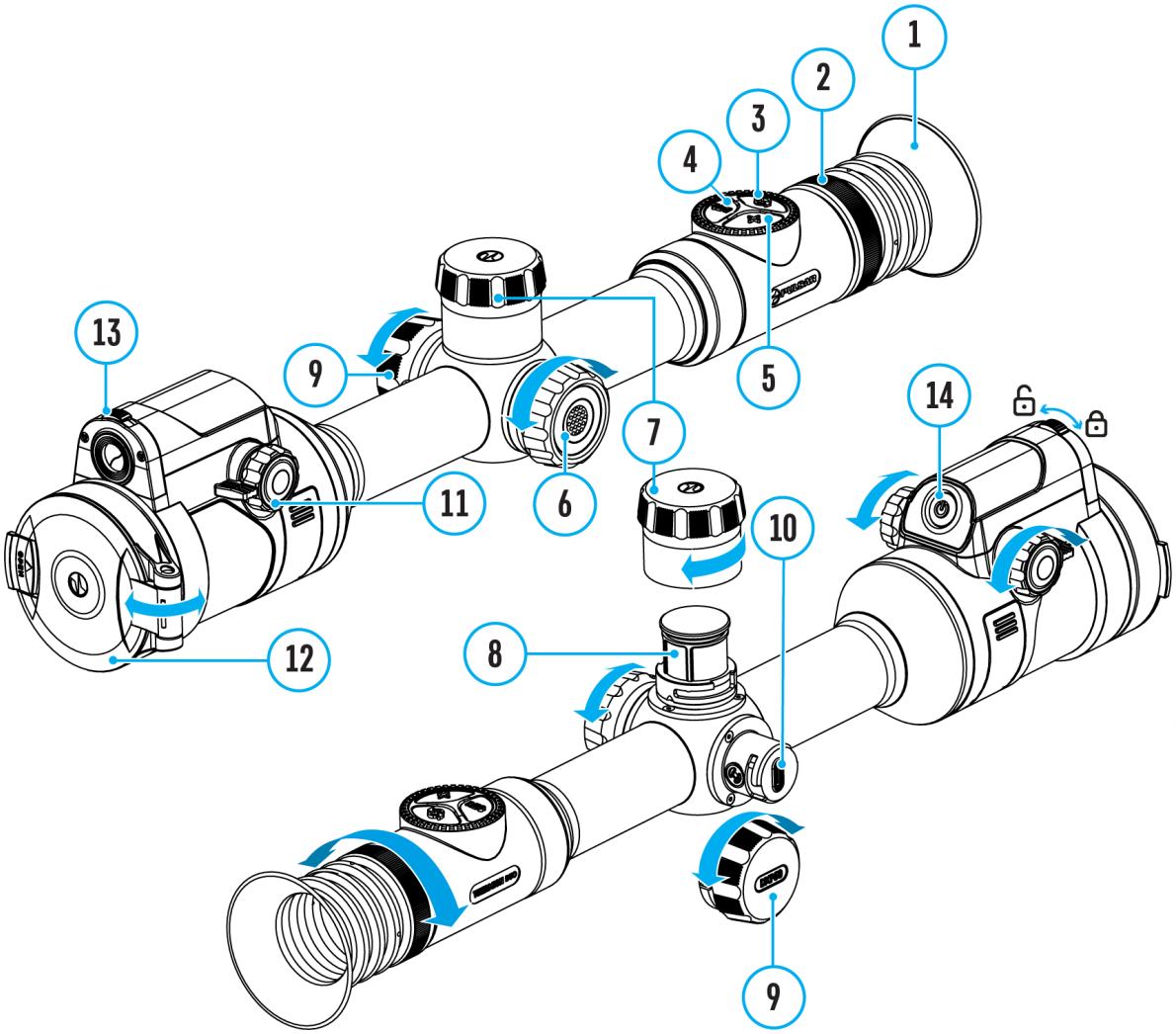

---

1. Press and hold the controller button **(6)** to enter the main menu.
2. Rotate the controller ring **(6)** to select the **Reticle & Zeroing** Image not found or type unl menu item and enter by briefly pressing the controller button **(6)** – zeroed distances are displayed at the bottom.
3. Select the distance you wish to delete and enter the submenu for

operating the distances with a brief press of the controller button **(6)**.

4. Select **Delete Distance** Image not found or type unknown item.
5. Press the controller button **(6)** briefly.
6. Select *“Yes”* in the appeared dialog box to delete a distance. *“No”* – to cancel deletion.
7. Press the controller button **(6)** briefly to confirm your selection.

Attention! If the primary distance is deleted, the first distance on the list automatically becomes the new primary distance.

Status Bar

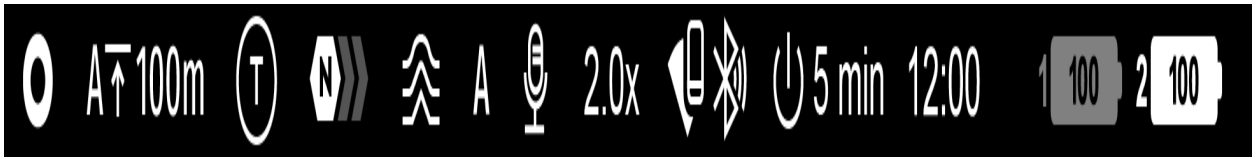

The status bar at the bottom of the display shows current operating statuses via icons, including:

1. Colour Mode (shown only in thermal imaging mode and Multispectral PiP):

- White hot

- Black hot

2. Actual zeroing profile (e.g., A)

3. Zeroing distance (e.g., 100 m)

4. Image mode:

D Digital mode

T Thermal imaging mode

Td Multispectral PiP Digital

Dt Multispectral PiP Thermal

TD Multispectral PiP Digital disabled

DT Multispectral PiP Thermal disabled

The image channel can be disabled in the “Viewing Channel Activation” sub-item of the **General Settings** section.

5. Amplification level (e.g., Normal; displayed only in thermal imaging mode and Multispectral PiP)

6. Smoothing Filter (displayed when the function is on; displayed only in thermal imaging mode and Multispectral PiP)

7. Calibration mode (a countdown timer :05 will appear instead of the calibration icon when in automatic calibration mode with 5 seconds remaining until automatic calibration; displayed only in thermal imaging mode and Multispectral PiP)

8. Microphone

9. Current magnification

10. Wi-Fi connection

11. Bluetooth:

- Bluetooth is on

- the device with Bluetooth is connected

12. Auto Shutdown function (e.g., 5 min.)

13. Clock

14. Power supply:

- Battery discharge level 1 100 2 100 (when riflescope is powered by a built-in or removable battery).
- External battery power indicator 100 (if the riflescope is powered by an external power supply).
- Battery indicator 100 with current percentage of charge (when charging from an external power source).
- Battery indicator shows a low battery charge
- Battery indicator shows a low internal battery charge

Quick Menu

Show device diagram

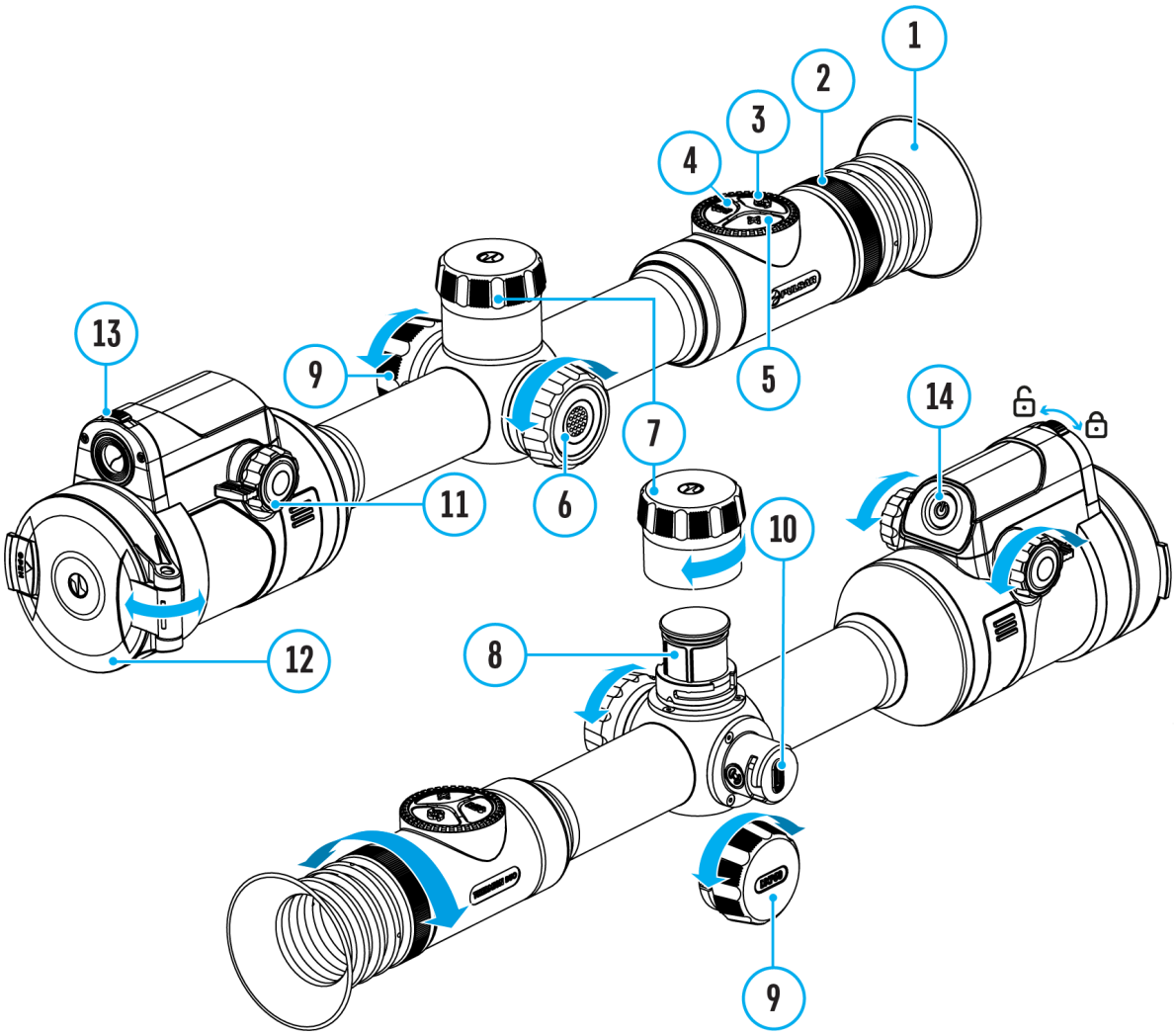

The quick menu allows you to control the main settings of the riflescope (brightness, contrast), use a stadiometric rangefinder, amplification modes, select the ballistic calculator distance, and change the zeroing distance (if there are several) to another one in the current profile.

- Press the controller button**(6)** briefly to enter the quick menu.
- A short press of the controller button **(6)** enables you to switch between functions, as described below.

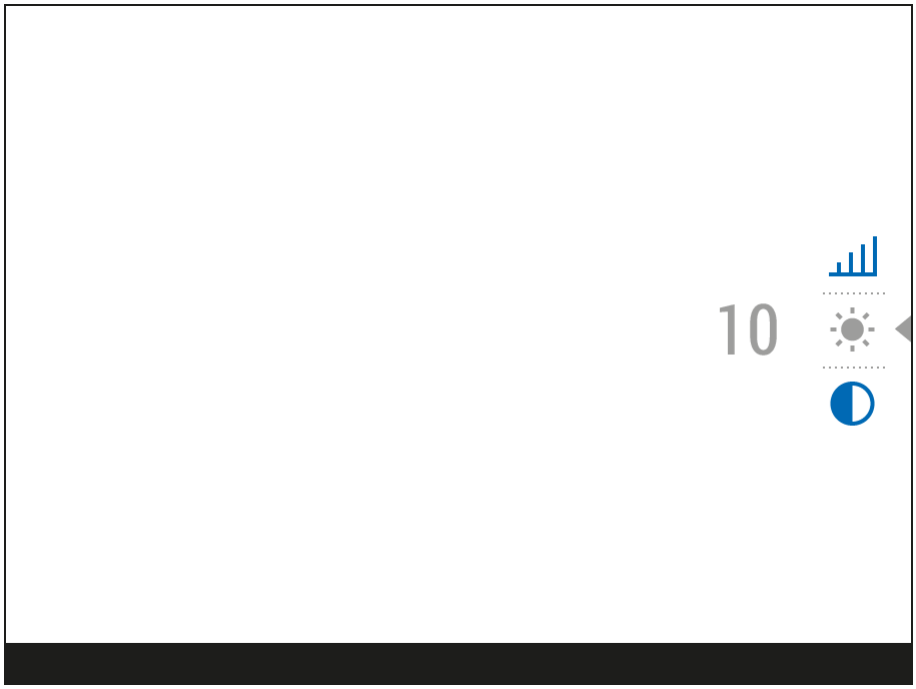

Brightness – rotate the controller ring **(6)** to change the display brightness value from 00 to 20.

Contrast – rotate the controller ring **(6)** to change the image contrast value from 00 to 20.

Amplification Levels – allows you to select one of three **amplifying levels of sensitivity**(Normal N, High H, Ultra U).

Note: To maintain brightness and contrast settings when changing amplifying levels, activate **User Mode**.

A100 ↑ – information on the current profile and zeroing distance in this profile (e.g., profile A, zeroing distance of 100 m). This information is always displayed in the status bar. Rotate the controller ring **(6)** to switch between the zeroing distances in the selected profile. This function is available if there are two or more distances in the profile.

*Tip:*To quickly switch between distances while hunting, leave the Zeroing Distance option selected before exiting the quick menu. The menu item will be saved, and the next time you enter the quick menu, you can quickly switch the zeroing distances by turning the controller **(6)** (for example, 100 m, 150 m, 200 m).

- change the distance to calculate corrections for the ballistic calculator. Rotate the controller ring **(6)**to select the distance.

This function is only visible when the ballistic profile is selected.

Note, that ballistic calculator uses angle/elevation readings of your riflescope in order to calculate the SPOA. Therefore, keep the reticle on the target while manually inputting the distance data.

Stadiametric rangefinder Image not found or type unknown – rotating the controller ring **(6)**, change the distance between the special mark points to determine the distance to the observed object (for more details on the rangefinder, see the **Stadiametric Rangefinder** section).

- Press and hold the controller button **(6)** to exit the menu or wait 10 seconds to exit automatically.

Amplification Level

Show device diagram

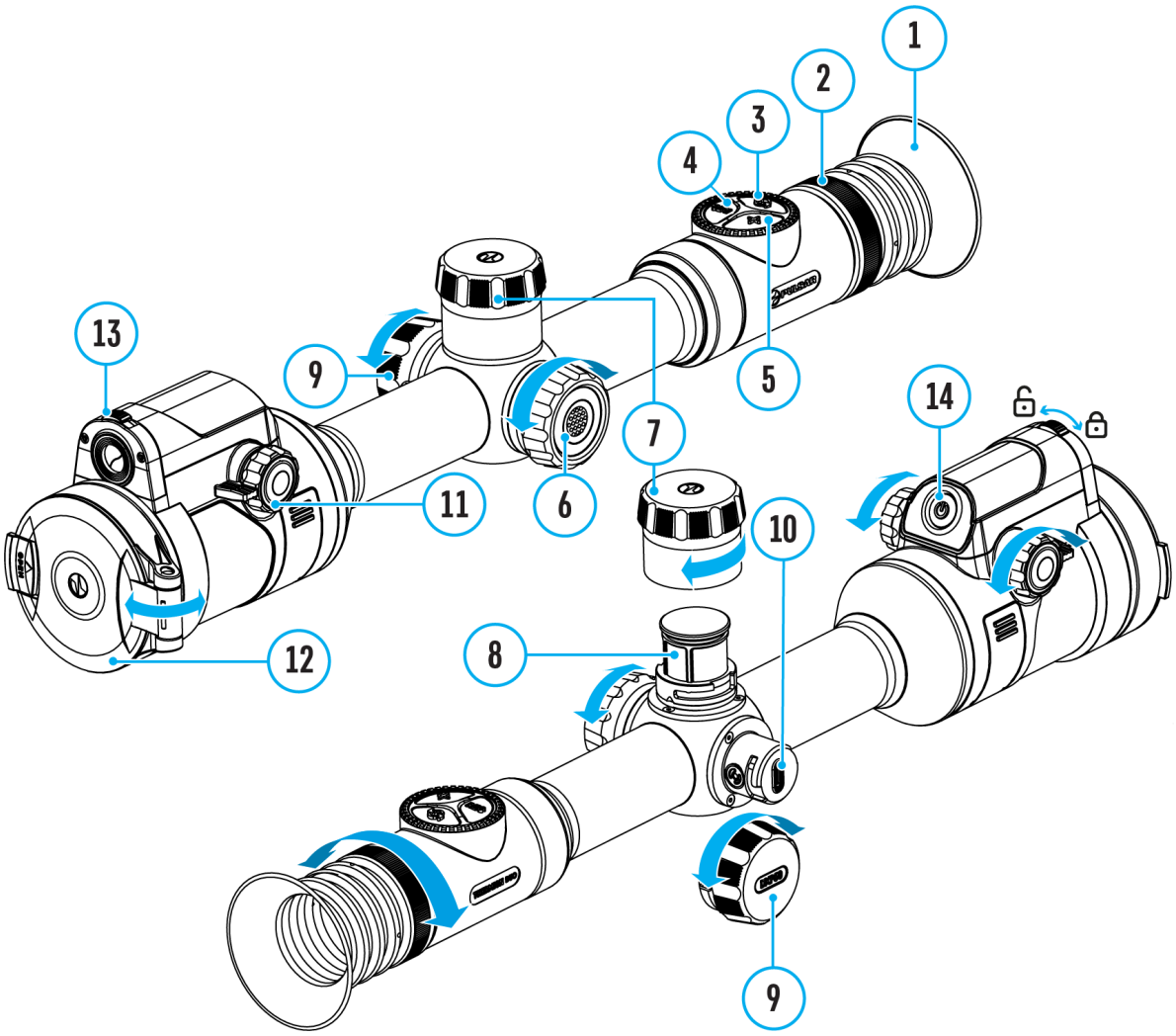

---

https://www.youtube.com/embed/StOPxTd-wps

Available in thermal imaging and PiP thermal imaging multispectral mode

Sensitivity enhancement levels (Normal, High, Ultra) are software algorithms that enhance the quality of detection and recognition in various observation conditions. When the temperature contrast decreases (fog, precipitation, high humidity), it is recommended to increase the amplification level. To

optimize the image, activate the **Smoothing Filter** in the main menu.

Normal

High

Ultra

1. Press and hold the controller button **(6)** to enter the quick menu.
2. By short pressing the controller button **(6)** select the menu item **Amplification level** .
3. Rotate the controller ring **(6)** to select one of the levels: Normal , High , Ultra .
4. Press and hold the controller button **(6)** to exit the menu or wait for 3 seconds to exit automatically.

Image Modes (Thermal Imaging/Digital/Multispectral PiP)

Show device diagram

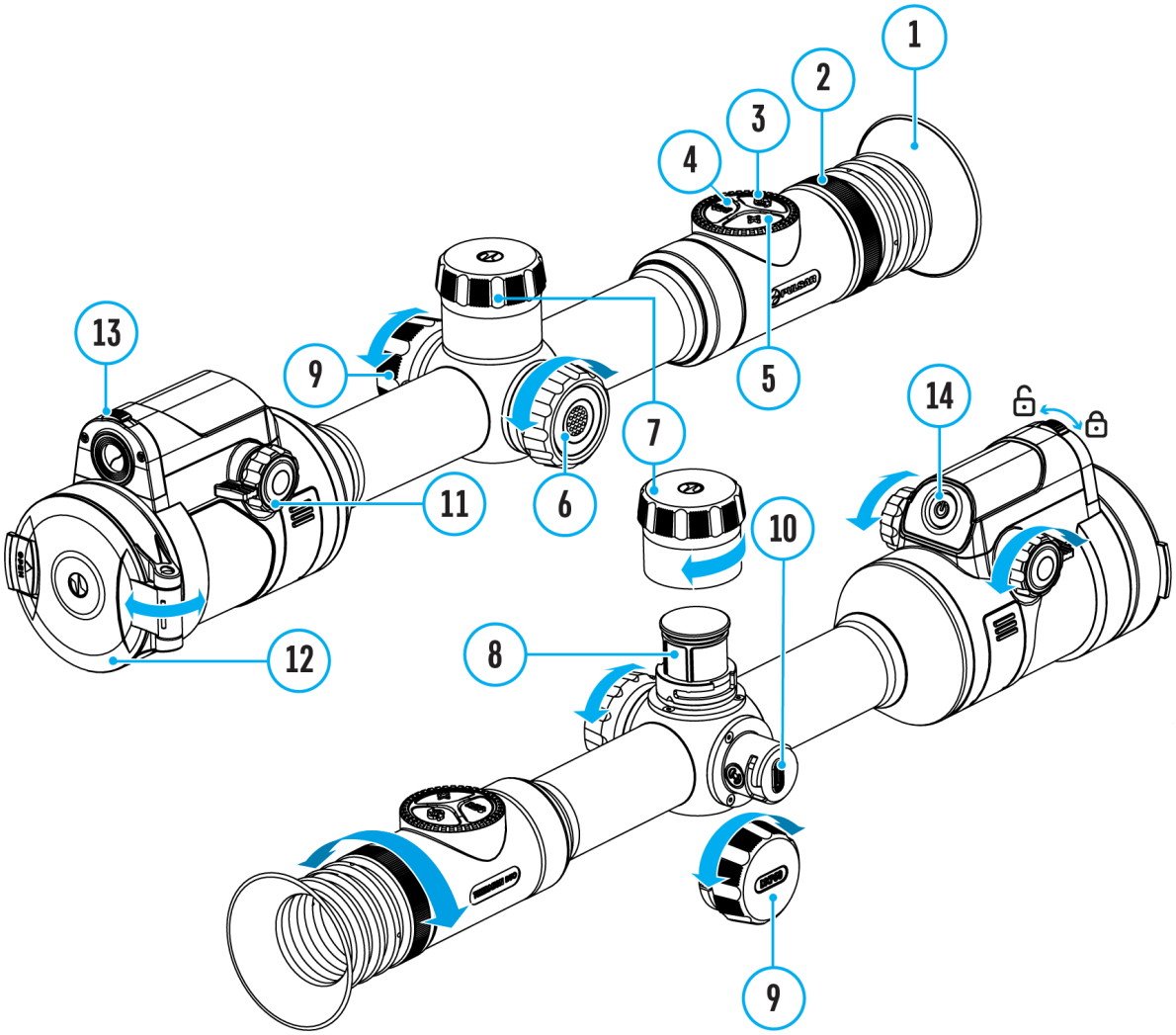

https://www.youtube.com/embed/x26ugNW4IJo

The device has 3 image modes: thermal imaging, digital and multispectral PiP mode.

- Quickly switch between thermal and digital modes by briefly pressing the **MODE (3)**button.
- Activate the multispectral PiP mode by a long press of the **MODE (3)** button.
- In the multispectral PiP mode, the image channels in the PiP window are switched by briefly pressing the **MODE(3)** button.

Thermal Imaging Mode

The device displays an image from a thermal imaging microbolometer when using the thermal imaging mode.

This mode allows you to use the device both at night-time and during the day in adverse weather conditions (fog, snow, haze) when there are obstacles (branches, tall grass, dense bushes etc.) that make it difficult to detect the target.

In thermal imaging mode, the riflescope does not need an external light source and is resistant to high light levels.

Digital Mode

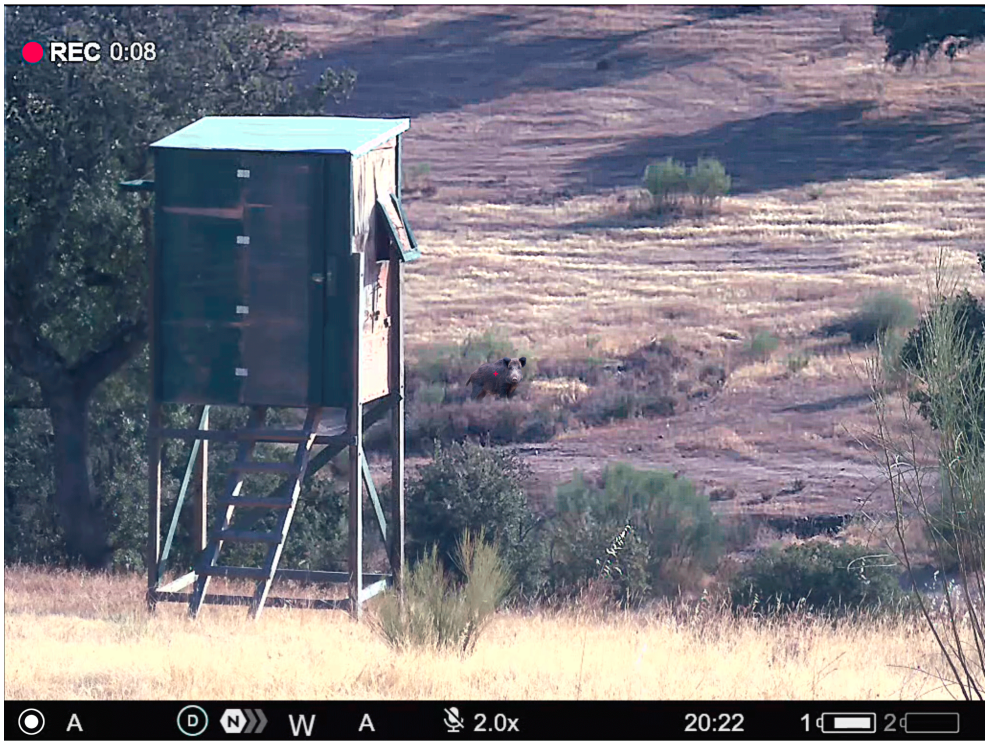

In digital mode, the device generates a colour image from a digital sensor.

The device can be used as a fully-featured daytime riflescope while maintaining all the functions of a digital riflescope (digital zoom, PiP, video recorder, Wi-Fi, etc.).

The digital channel is intended for use only during the day, both in sunny and cloudy weather. This mode is not intended for use at night, including with an IR illuminator, due to the presence of an IR filter.

Multispectral PiP

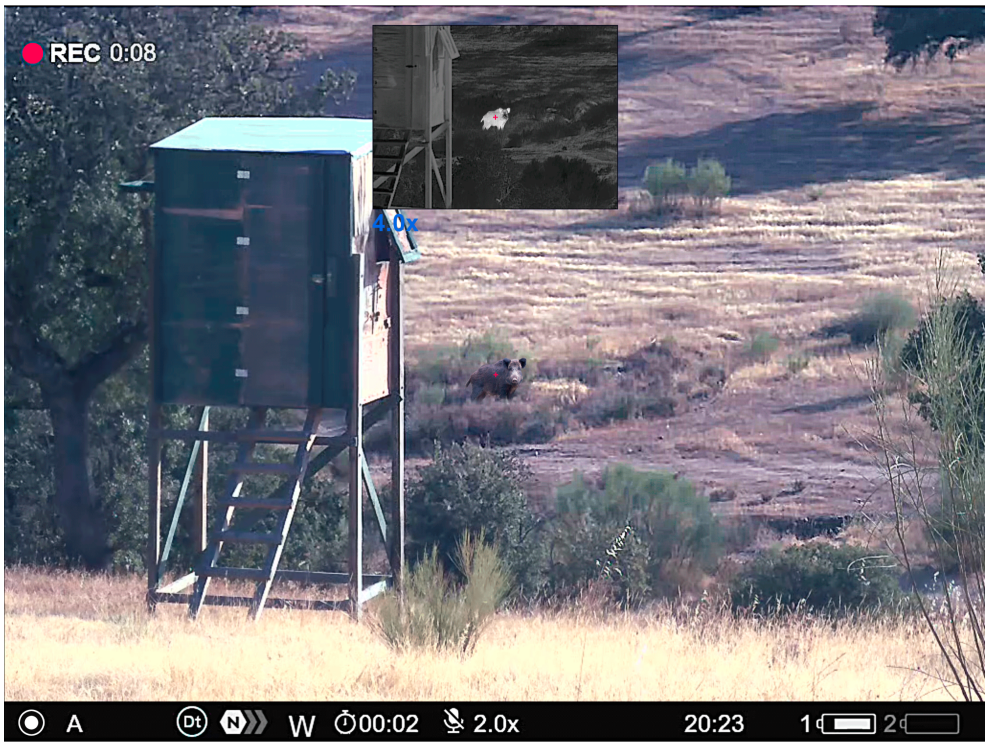

In the multispectral PiP mode, the image of one channel is displayed in the main window, and the image of the second channel is displayed in the PiP window.

In this mode, digital zoom is applied only to the PiP window. The magnification in the main window is set to base.

Ballistic Calculator

Show device diagram

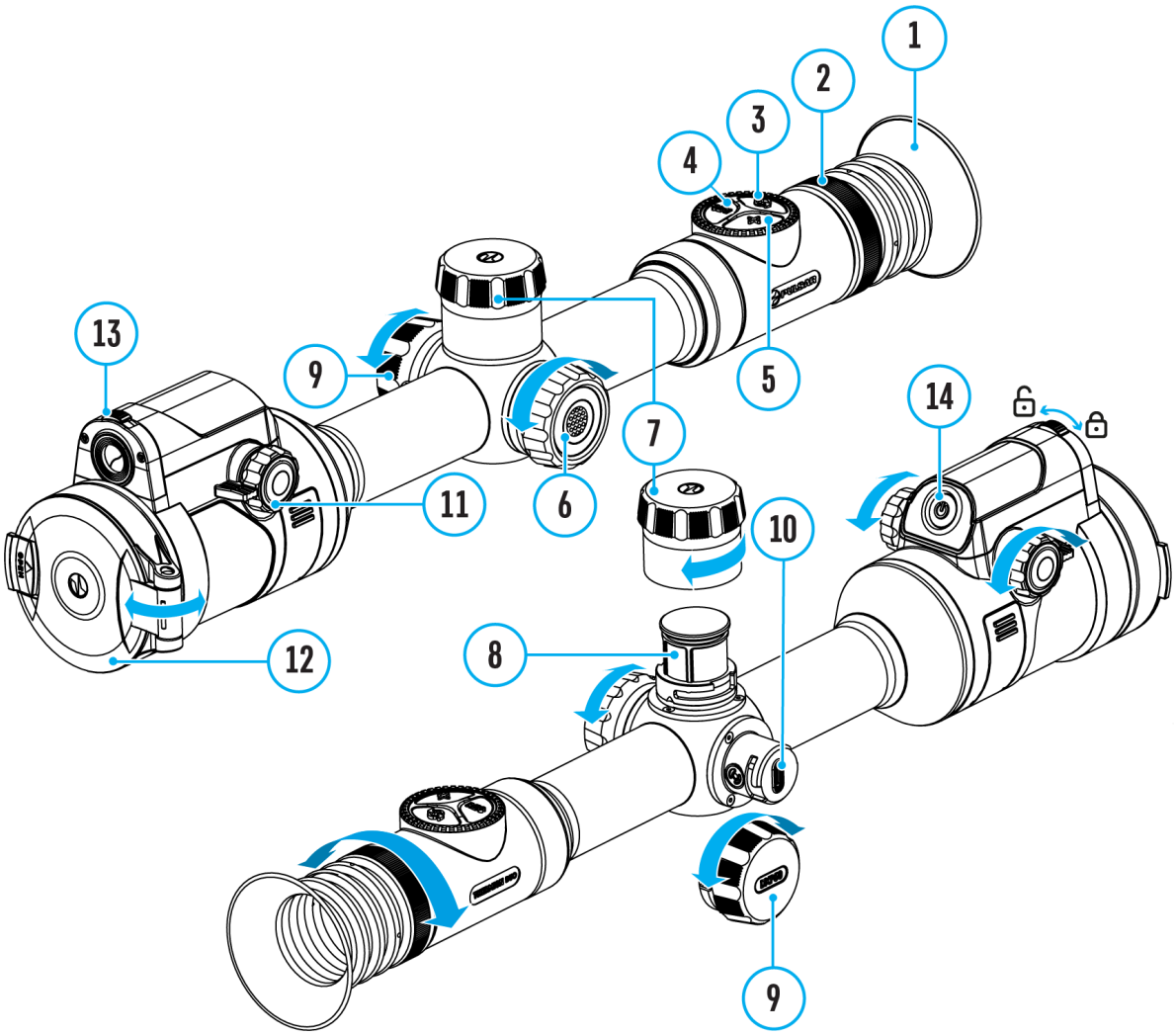

---

1. Install the Stream Vision Ballistics app from Google Play or AppStore.

2. Go to Profiles tab.

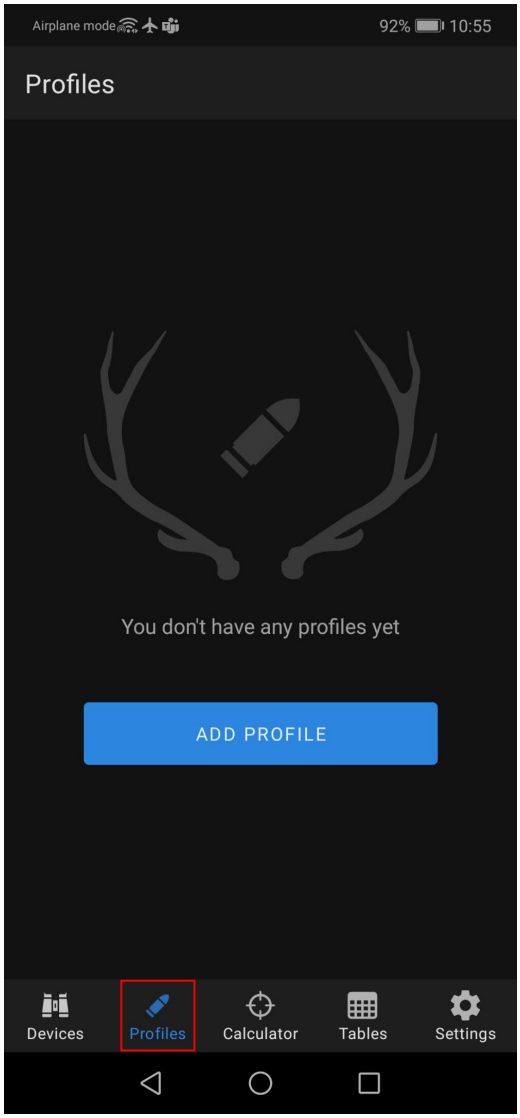

3. Create a profile for your riflescope, ammunition and zeroing distance. Make sure that “Ballistic parameters” switch is on. If your ammo is not on the list, you can enter its parameters manually. The more parameters you specify, the more accurate the recommended point of aiming will be.

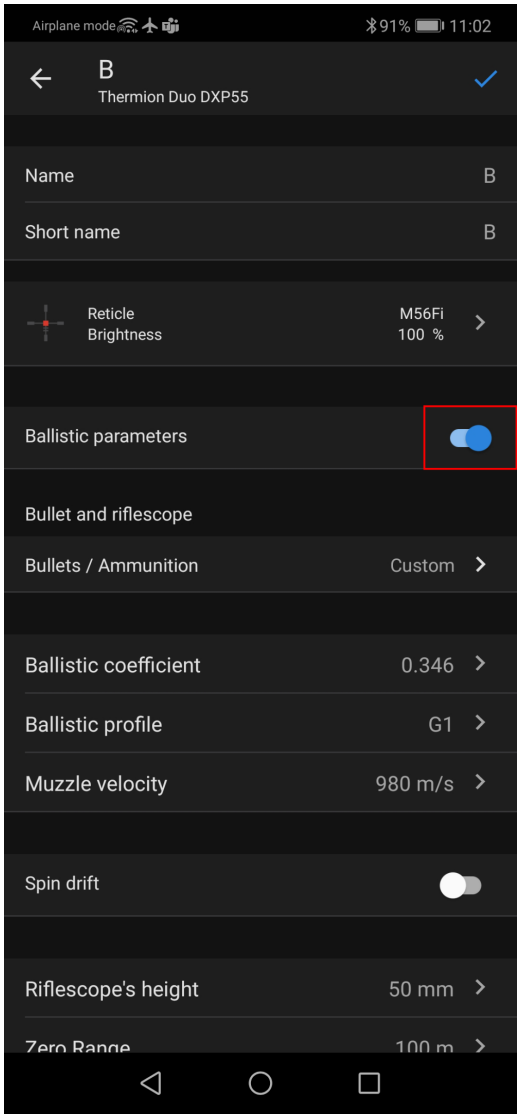

4.Adjust the temperature, pressure and humidity of the environment while zeroing your riflescope.

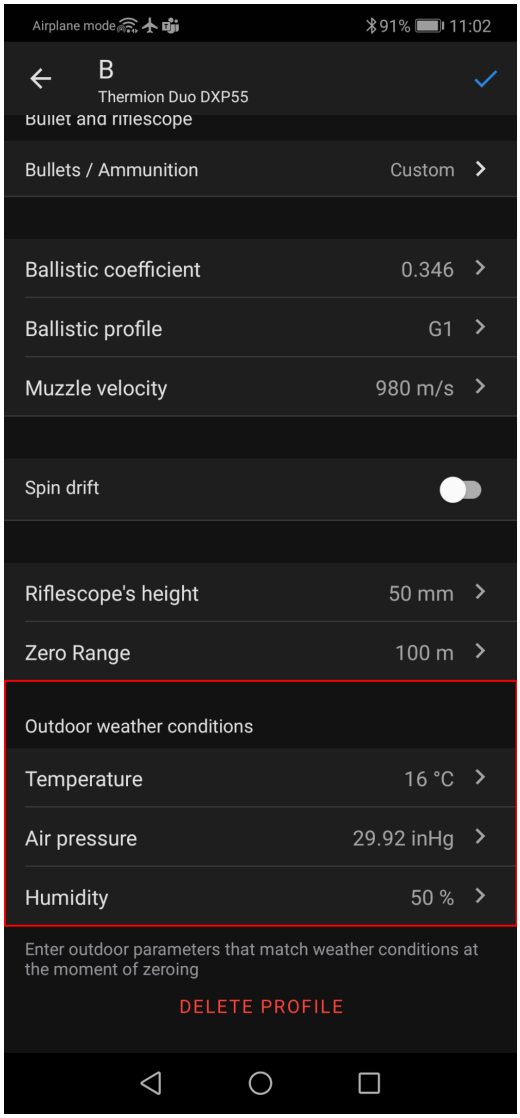

5. Enter a profile name and click save ✓.

6. **Connect** your riflescope to your smartphone using Bluetooth. First, make sure that your riflescope has the latest firmware version 3.3 or higher installed.

7. Load the profile into the riflescope.

To do this, go to the "Devices" tab –> Select your riflescope –> "All device profiles" -> click on the profile you want to replace and select the created profile from the list.

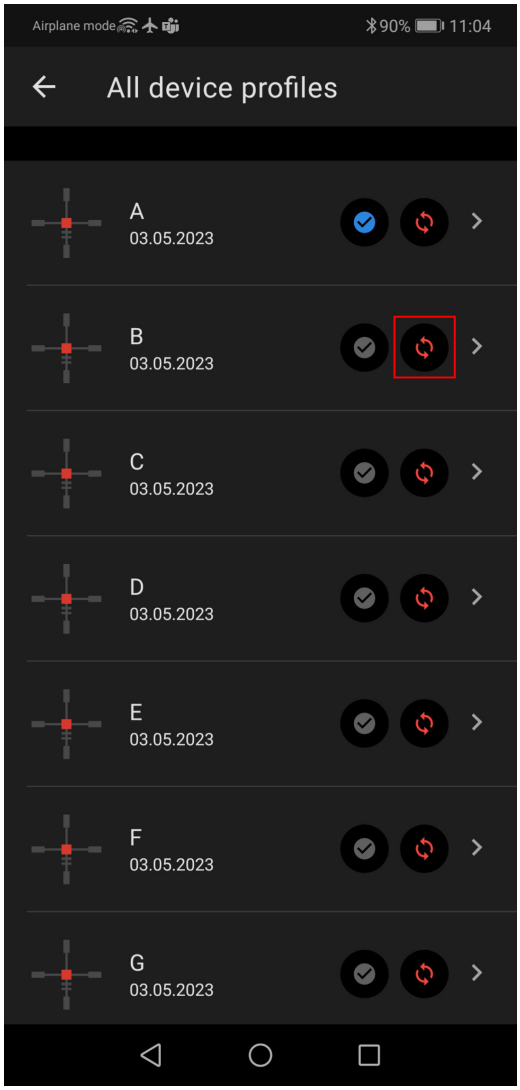

8. Set the status to "Active" for the ballistic profile. To do this, click on the button next to the desired profile, or select it in the profile selection menu in the riflescope.

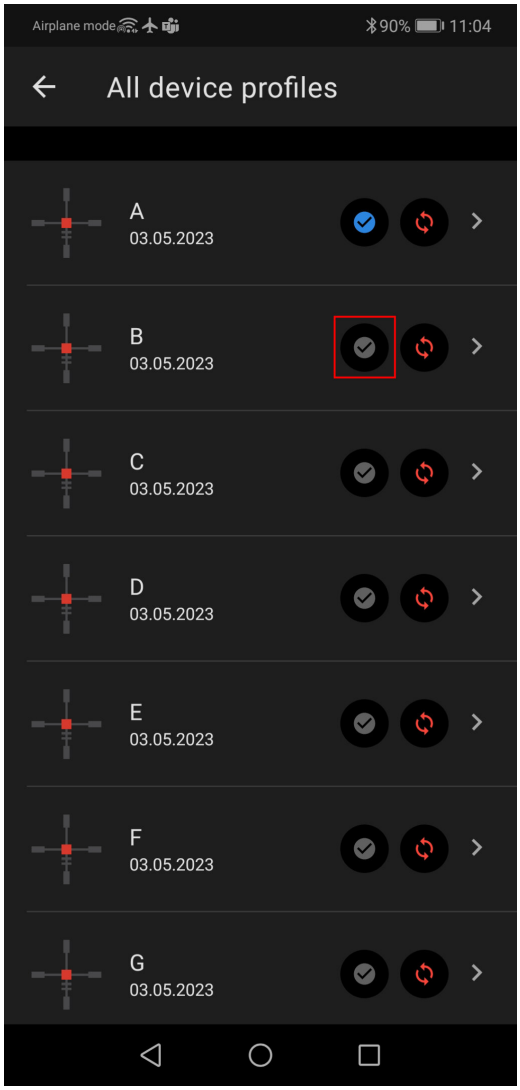

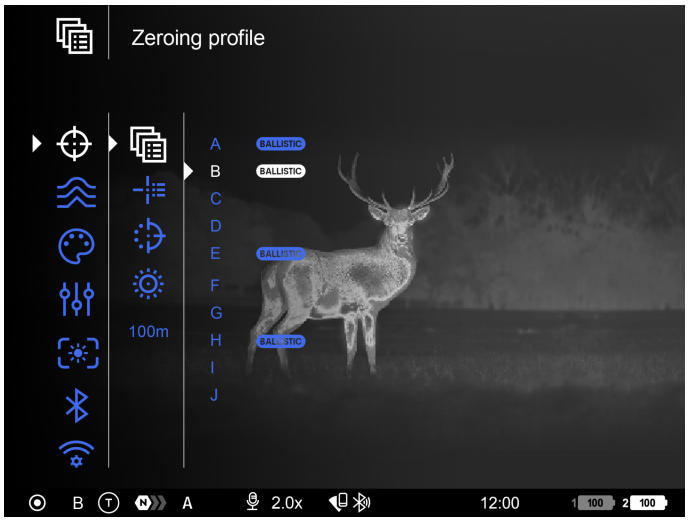

9. Make sure that the Ballistic Activation option is enabled in the riflescope's **Ballistics**menu.

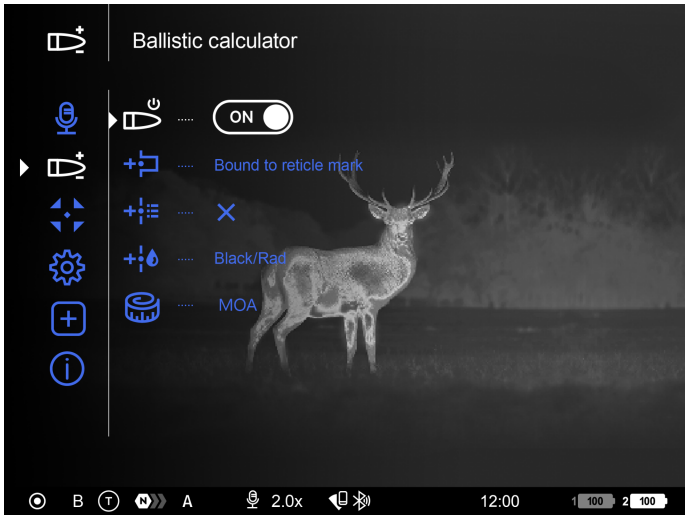

10. Select the desired distance in the quick menu:

- Press the controller button **(6)** briefly to enter the quick menu.
- Briefly press the controller button **(6)** to select .
- Rotate the controller ring **(6)** to select the desired distance. The SPOA mark ✕ will shift based on the selected distance. Note, that ballistic calculator uses angle/elevation readings of your riflescope in order to calculate the SPOA. Therefore, keep the reticle on the target while manually inputting the distance data.
- Press and hold the controller button **(6)**to exit the menu or wait 10 seconds to exit automatically.

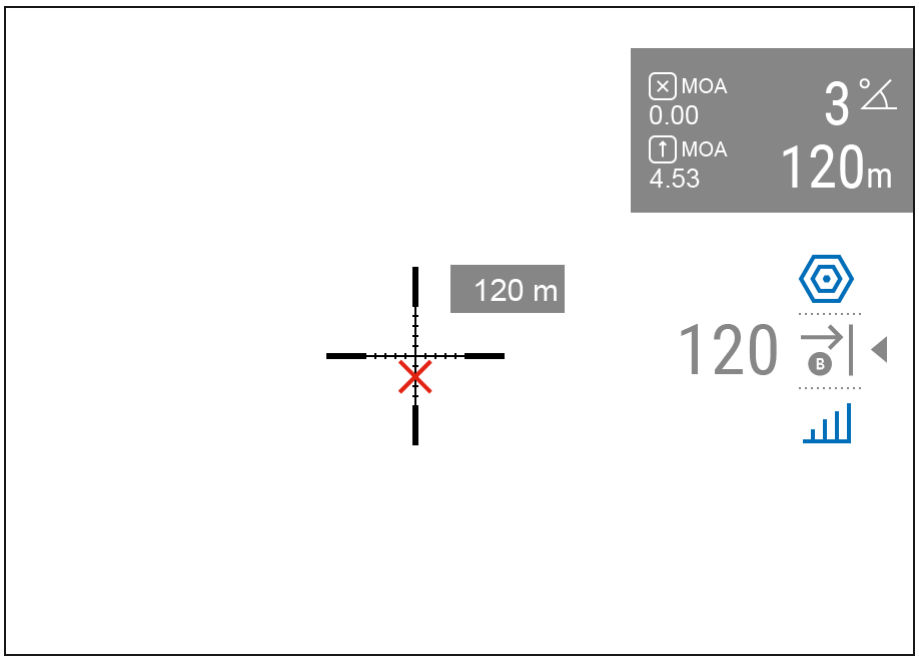

11. Check the accuracy of your profile settings with a test shot at the shooting range.

Note: profiles for different types of ammunition must be zeroed separately.

12. To activate the use of weather data in your geolocation during the shot, go to the "Devices" tab -> Select your riflescope -> "Outdoor".

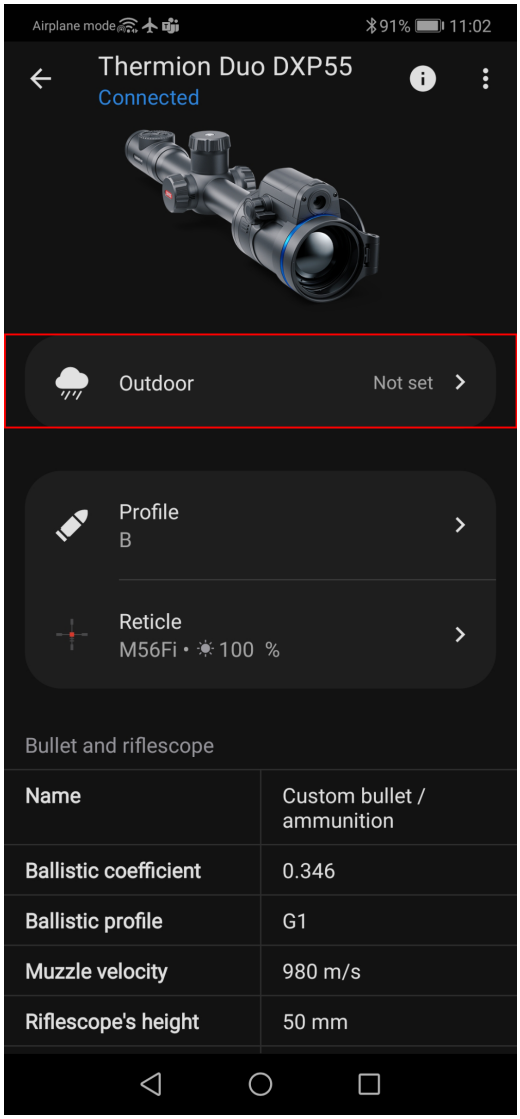

In the **Ballistics** section of the main menu, you can configure the following settings of the ballistic calculator:

- Screen position of the measured distance value
- Turn on/off the ballistic calculator
- Correction units
- Reticle type and color for suggested point of aiming.

Stream Vision Ballistics Manual

Android

iOS

Video Recording and Photography

Show device diagram

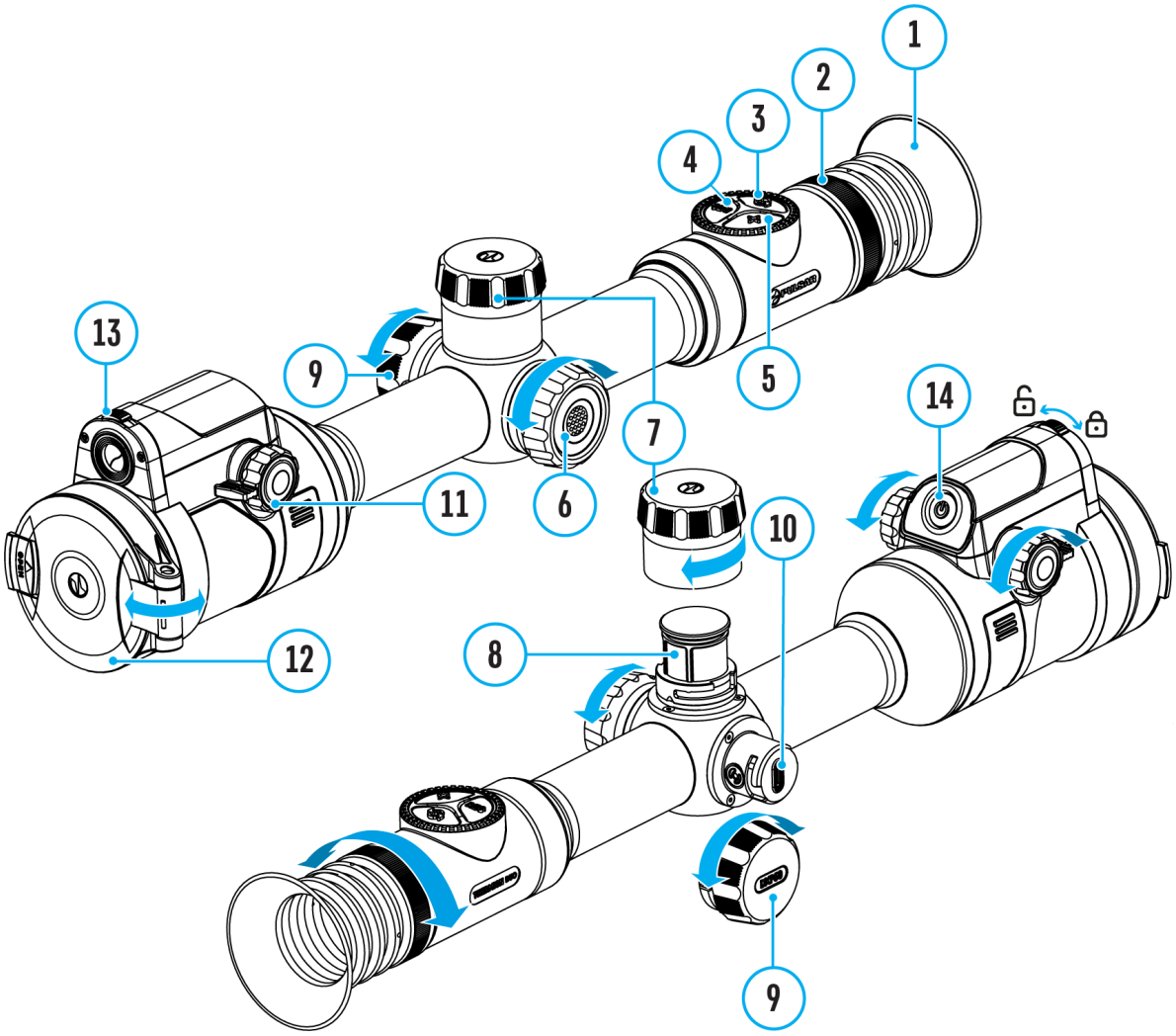

The riflescope is capable of video recording and photography. Videos and images are saved on the built-in memory card.

Before using the photo and video functions, read the **Date**and **Time** subsections of the **General Settings** section.

For information on how to watch recorded photos and videos, see the

Stream Vision 2 user manual: **Android**, **iOS**.

Built-in recorder operates in two modes:

- **Photo** (photography; the icon is displayed in the upper left corner of the display).

- **Video** (video recording; the icon is displayed in the upper left corner of the display, the total remaining recording time is given taking into account the current resolution in the HH:MM format (hours:minutes).

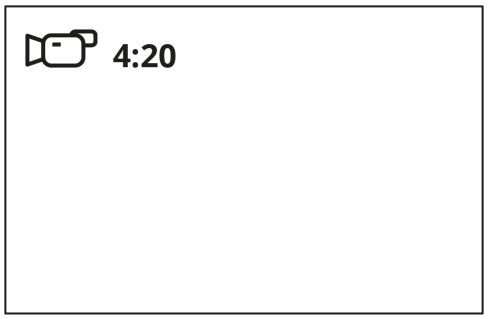

Toggle (switch) between the riflescope operating modes with a long press of the **REC (4)** button. Switching between the modes is cyclical (**Video**–> **Photo**–> **Video**...).

Photo mode. Capturing an image

1. Switch to the **Photo**mode with a long press of the **REC (4)** button.

2. Press the **REC (4)** button briefly to capture a photo. The icon flashes – the photo file is being saved to the built-in SD card.

Video mode. Recording a video

1. Switch to the **Video** mode with a long press of the **REC (4)** button.

2. Press the **REC (4)** button briefly to start video recording.

3. When the video recording starts, the icon will disappear, instead of it the **REC** icon as well as the video recording timer displayed in the MM:SS (minutes:seconds) format will appear ●REC | 00:25.

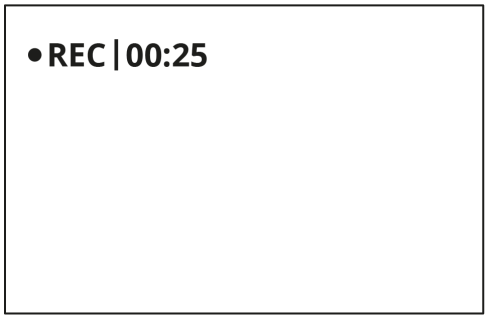

4. Pause/continue recording by briefly pressing the **REC (4)** button.

5. Press and hold the **REC (4)** button to stop video recording.

Video files are stored in the built-in memory card:

- After turning off the video recording;
- Upon powering the riflescope off if recording was on;
- When the memory card is overfilled during recording (Memory Full message appears on the display).

Notes:

- You can enter and navigate the menu during video recording.
- Recorded videos and photos are saved to the built-in memory card of the riflescope in the format img_xxx. jpg (for photos); video_xxx. mp4 (for video).
- Videos are recorded in clips with a maximum duration of 5 minutes. The number of files is limited by the riflescope's built-in memory and video compression ratio.
- Regularly check free memory within the built-in memory card and move the footage to other storage media to free up the memory card space.
- In case of a memory card error, you can use the format function in the **General Settings** section of the main menu.
- When the Display Off function is activated, video recording continues to run in the background.

Discrete Digital Zoom

Show device diagram

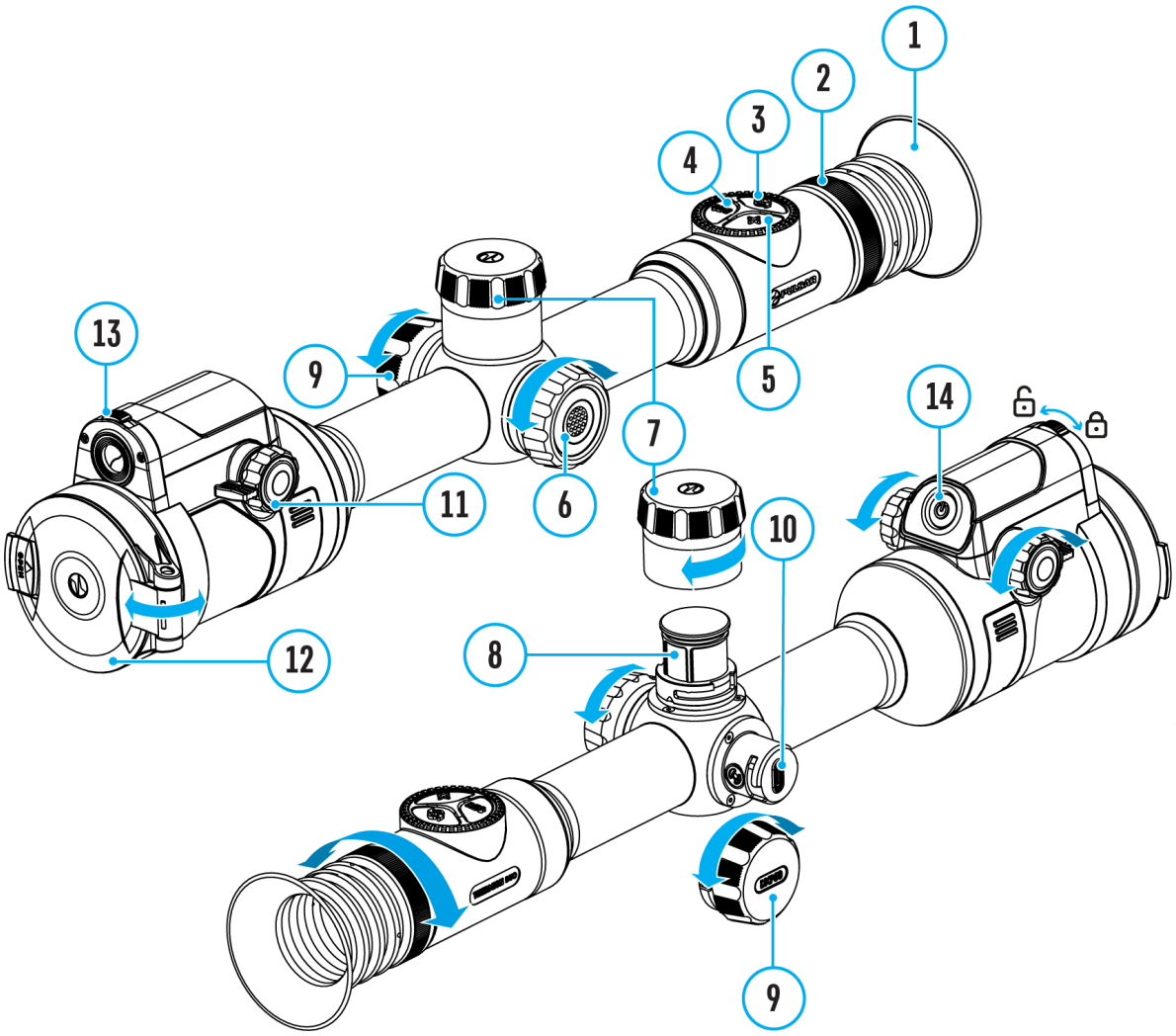

Discrete digital zoom allows you to quickly increase the basic magnification (see **Magnification** line in the table of **Technical Specifications**) by 2x or 4x, as well as return to the basic magnification.

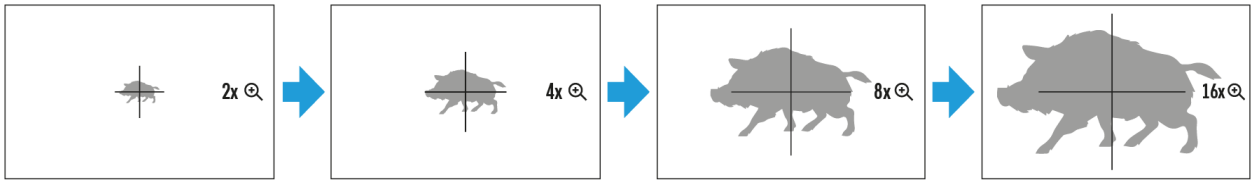

- Press the **ZOOM (5)** button successively to change the magnification

ratio of the riflescope.

- While the icon Image found or type unknown is visible on the screen, rotate the controller ring **(6)** for smooth digital zooming from the current magnification.

Note: the magnification value is reset to the base value when the device is switched off.

PiP Function

Show device diagram

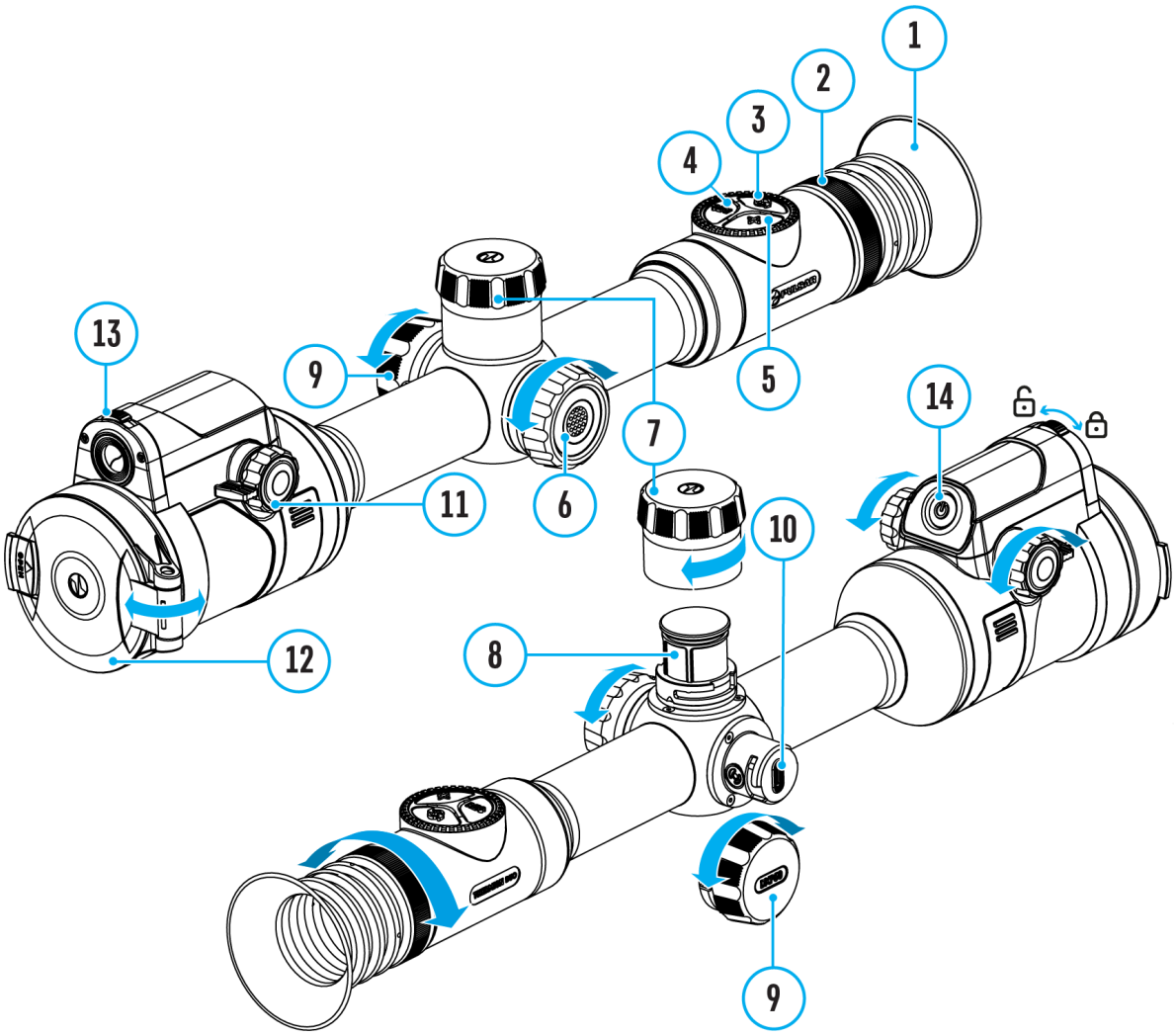

Available in thermal imaging and digital mode

The PiP function (Picture-in-Picture) allows you to see both a magnified image in a particular dialog box and the main image.

In this mode, the same image channel is displayed in the main window and the PiP window.

To use the multispectral PiP mode, see **Image Modes (Thermal Imaging/Digital/Multispectral PiP)**.

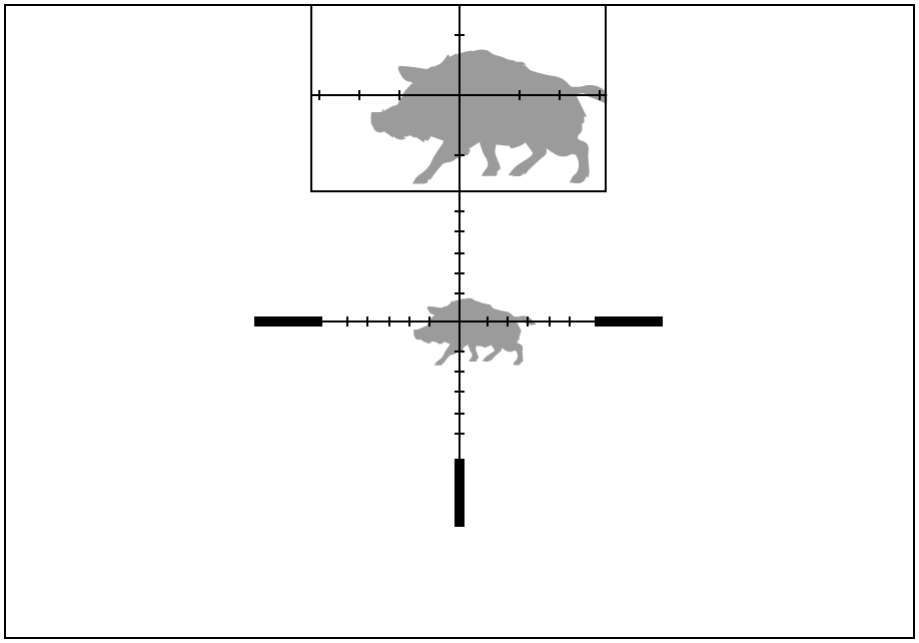

1. Press and hold the **ZOOM (5)** button to turn on/off the PiP function.
2. To change the digital zoom in the PiP window, briefly press the **ZOOM (5)**button or rotate the controller ring **(6)** until the icon is visible on the screen .
3. The magnified image is displayed in a particular dialog box, with the full magnification being used.
4. The rest of the image is displayed only with the optical zoom (digital zoom is off).
5. When PiP is turned off, the display shows the full magnification set for the PiP mode.

Display-Off Function

Show device diagram

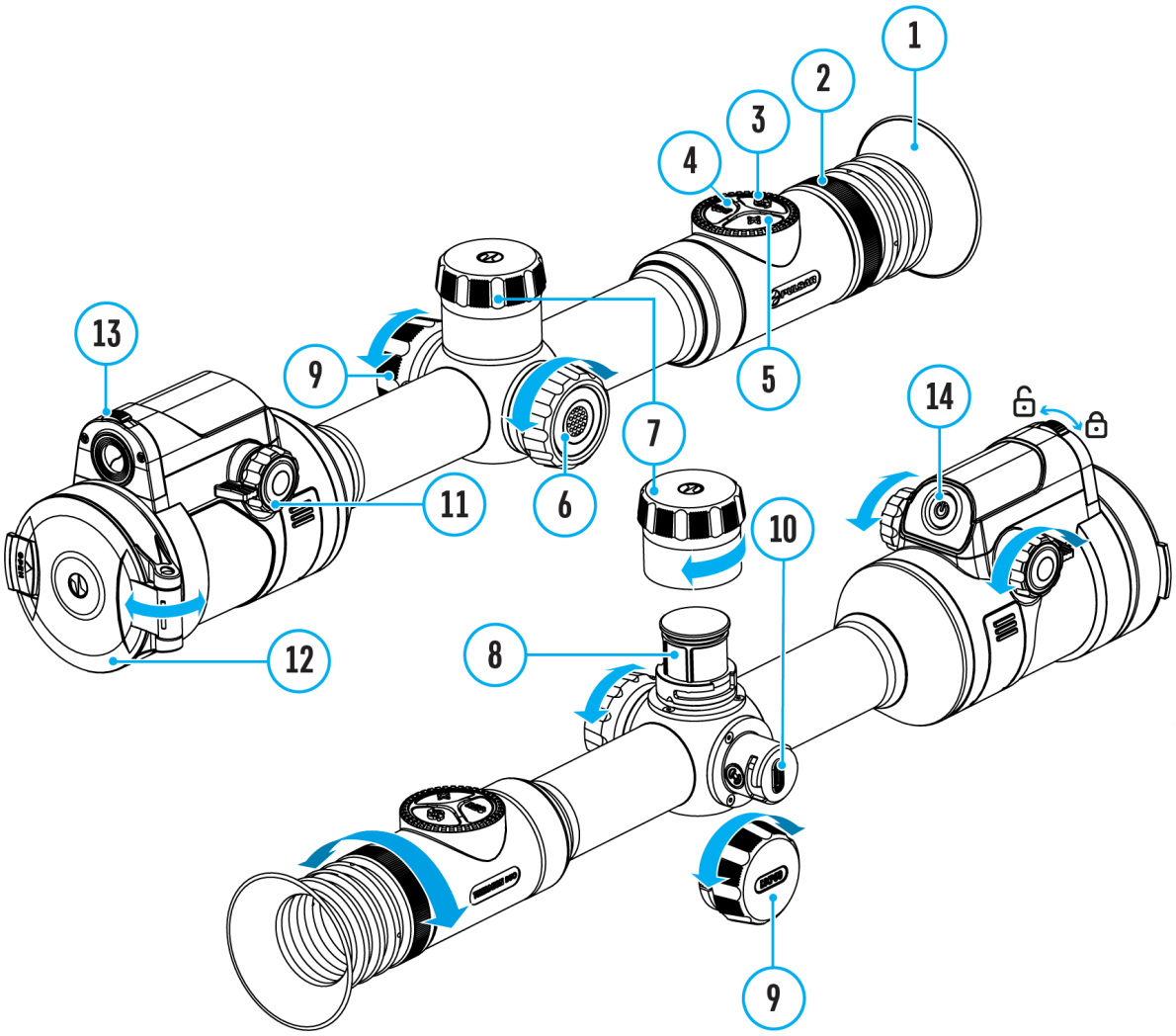

This function darkens the screen, which aids the user’s concealment. However, the device stays on.

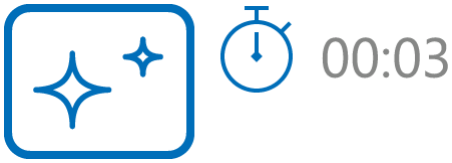

---

1. When the device is on, press and hold the **ON/OFF (14)** button for less

than 3 seconds. The display will turn off, the current time and the **"Display off"**icon will appear.

2. Press the **ON/OFF (14)** button briefly to turn on the display.
3. When you press and hold the **ON/OFF (14)** button, the display shows the icon **"Display off"** with a countdown. Holding the button down for the duration of the countdown will power the device off completely.

Wi-Fi Function

Show device diagram

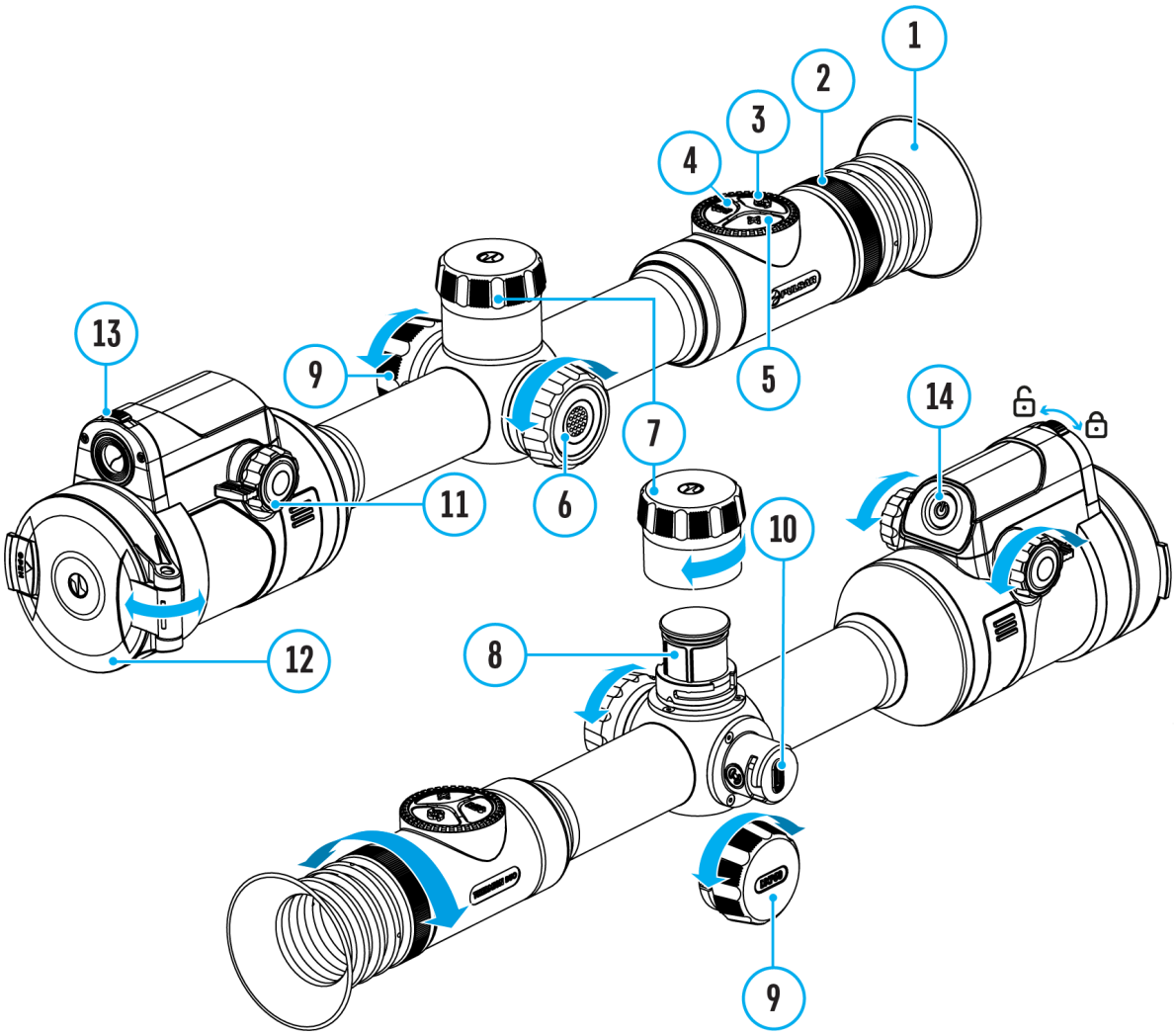

The riflescope has a function for wireless communication with mobile devices (smartphone or tablet) via Wi-Fi.

1. To enable the wireless module, enter the main menu by long pressing the controller button **(6)**.
2. Rotate the controller ring **(6)** to select the **Wi-Fi Activation** menu item.
3. Press the controller button**(6)** briefly to turn on/off the Wi-Fi module.

Wi-Fi is displayed in the status bar as follows:

Indication in the Status Bar	Connection Status
	Wi-Fi is switched off
	Wi-Fi is switched on by the user, Wi-Fi connection in the riflescope is in progress.
	Wi-Fi is switched on, there is no connection to the riflescope
	Wi-Fi is switched on, there is connection to the riflescope

- An external device recognizes the riflescope under the name ThermionDuo_XXXX, where XXXX are the four last digits of the serial number.
- After entering the password on a mobile device (see **Password Setup** subsection of the **Wi-Fi Settings** section for more information on setting a password) and setting up a connection, the icon in the riflescope status bar will change to Image found or type unknown.
- Launch Stream Vision 2 application on your mobile device (see **Stream Vision 2** section).
- Video broadcasting on a mobile screen starts after the viewfinder button on the mobile screen is activated.
- The Wi-Fi function will turn off automatically if there is not enough battery power for Wi-Fi.

Scalable Reticles

http:////e.issuu.com/embed.html?d=thermion_2_reticle_catalogue_en&u=yukon2

Show device diagram

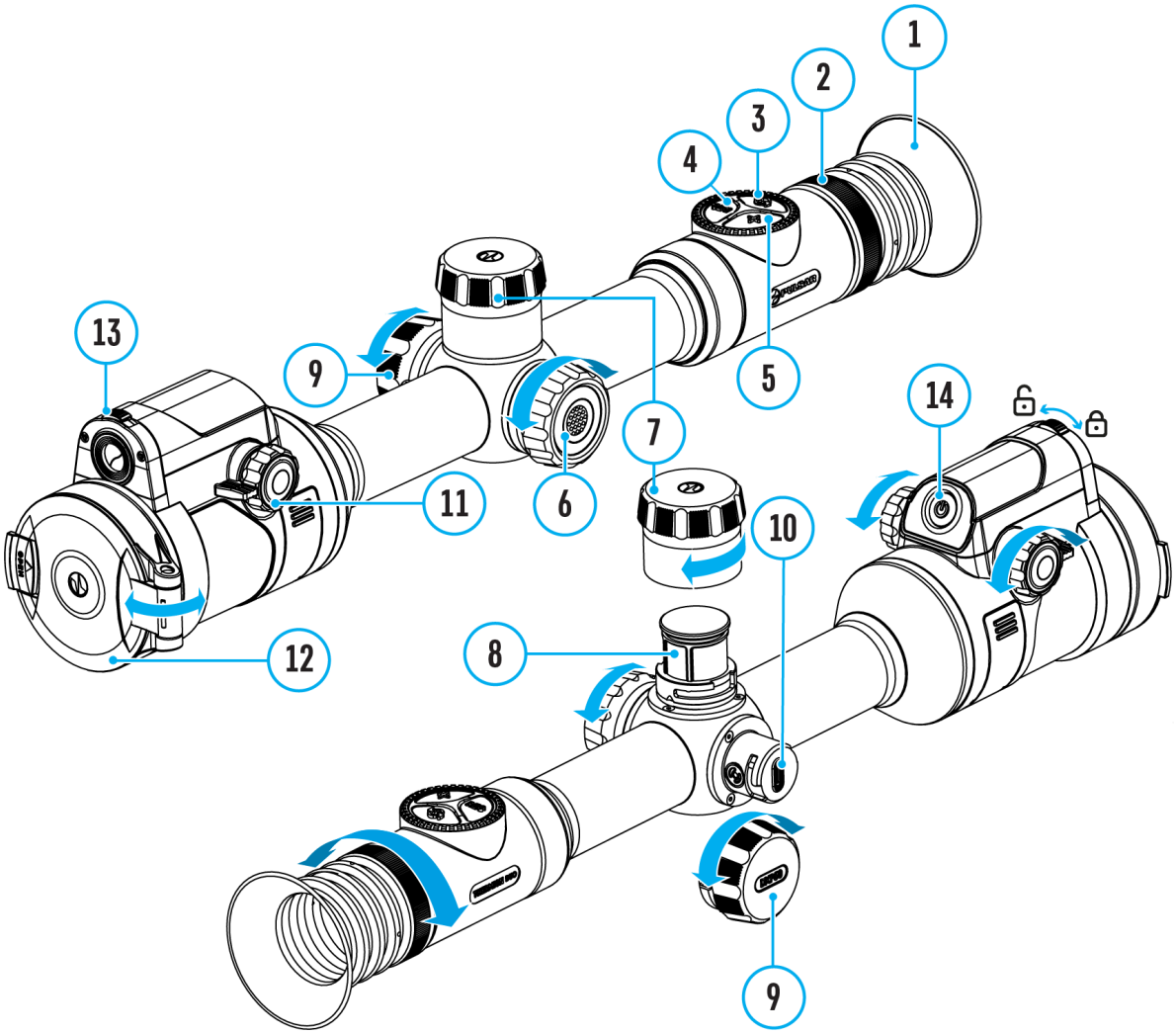

This function is designed to preserve ballistic properties of the scalable reticles X51Fi-300, M56Fi, M57Fi for all magnifications.

1. Enter the main menu with a long press of the controller button **(6)**.
2. Enter submenu **Reticle & zeroing** **-> Reticle Type** Image not found or type unknown
3. Select the reticle X51Fi-300, M56Fi, M57Fi.

Notes:

- When zooming in and out the image, the selected reticle on the display and in the recorded video changes its geometrical size according to the magnification selected.
- In thermal imaging and digital modes, the reticle size is changed both on the main screen and in the PiP window.

Stadiametric Rangefinder

Show device diagram

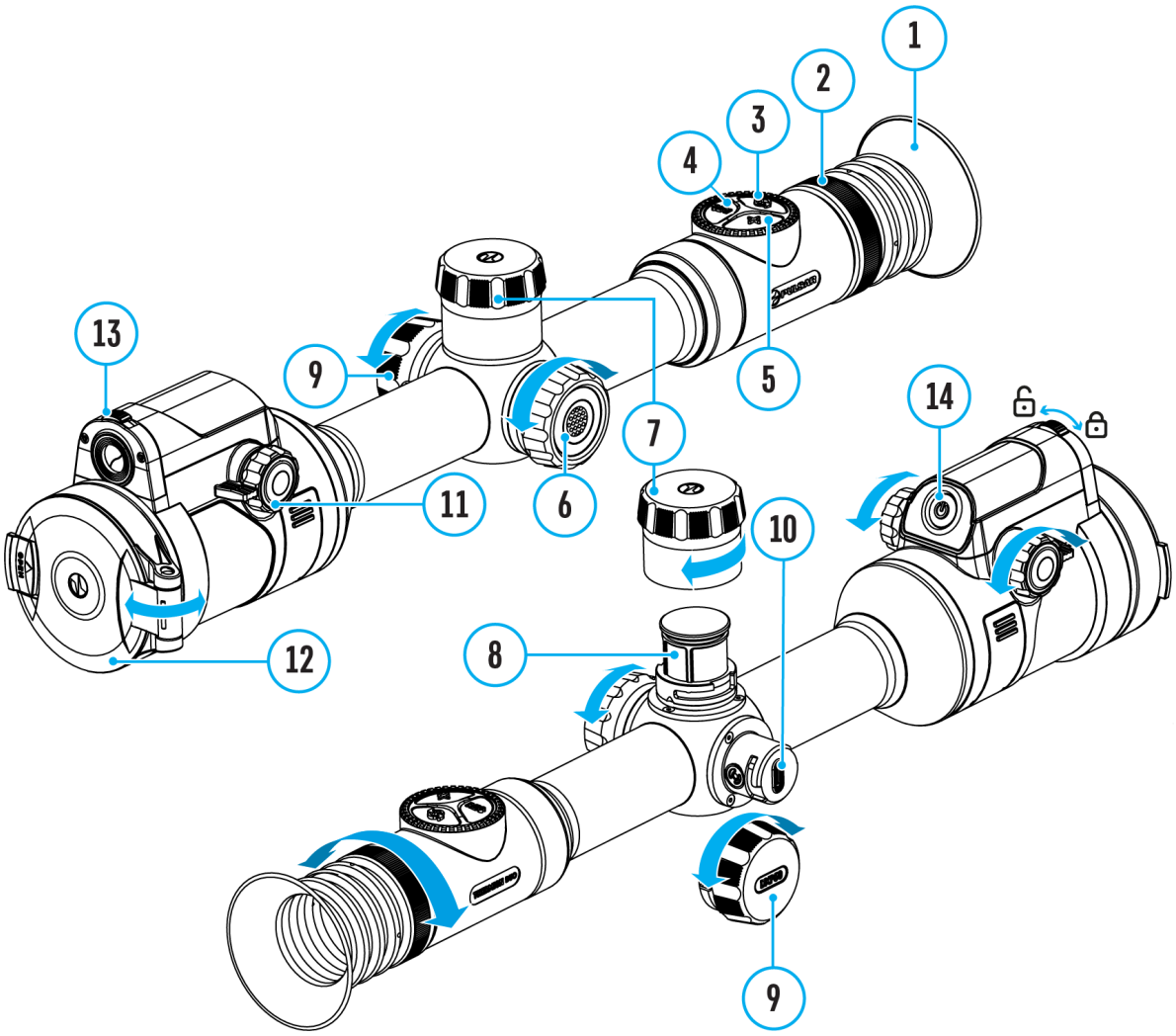

Thermal imaging riflescopes are equipped with a stadiametric rangefinder, which allows you to determine the approximate distance to an object, if its size is known.

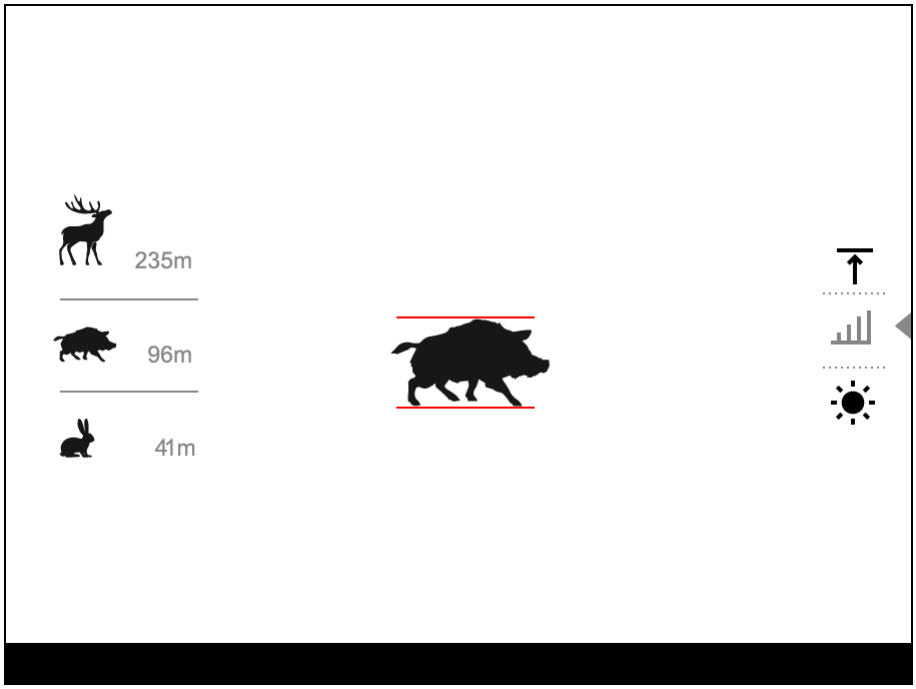

1. To select the **Stadiametric Rangefinder** function, enter the **Quick Menu** by briefly pressing the controller button **(6)**.
2. Press the controller button **(6)** briefly to select the icon Image not found or type unknown.
3. The display will show the lines for measurements, the icons and numbers of the measured distance for three objects.
4. Place the bottom fixed line under the object.
5. Rotate the controller ring **(6)**to move the upper line relative to the lower horizontal fixed line so that the object is located directly between the lines. A target range automatically recalculated along with movement.
6. To exit the rangefinder mode, briefly press the controller button**(6)** or wait 10 seconds to exit automatically.

Notes:

- There are three predefined values for objects: Hare – 0.3 m high, Boar – 0.7 m high, Deer – 1.7 m high.
- The measured range value is rounded off before being displayed – for large range values up to 5 m, for shorter range – up to 1 m.
- To select a unit of measurement (meters or yards), go to the **General Settings** Image not found or type unknown menu item => **Units of Measure** submenu.

USB Connection

Show device diagram

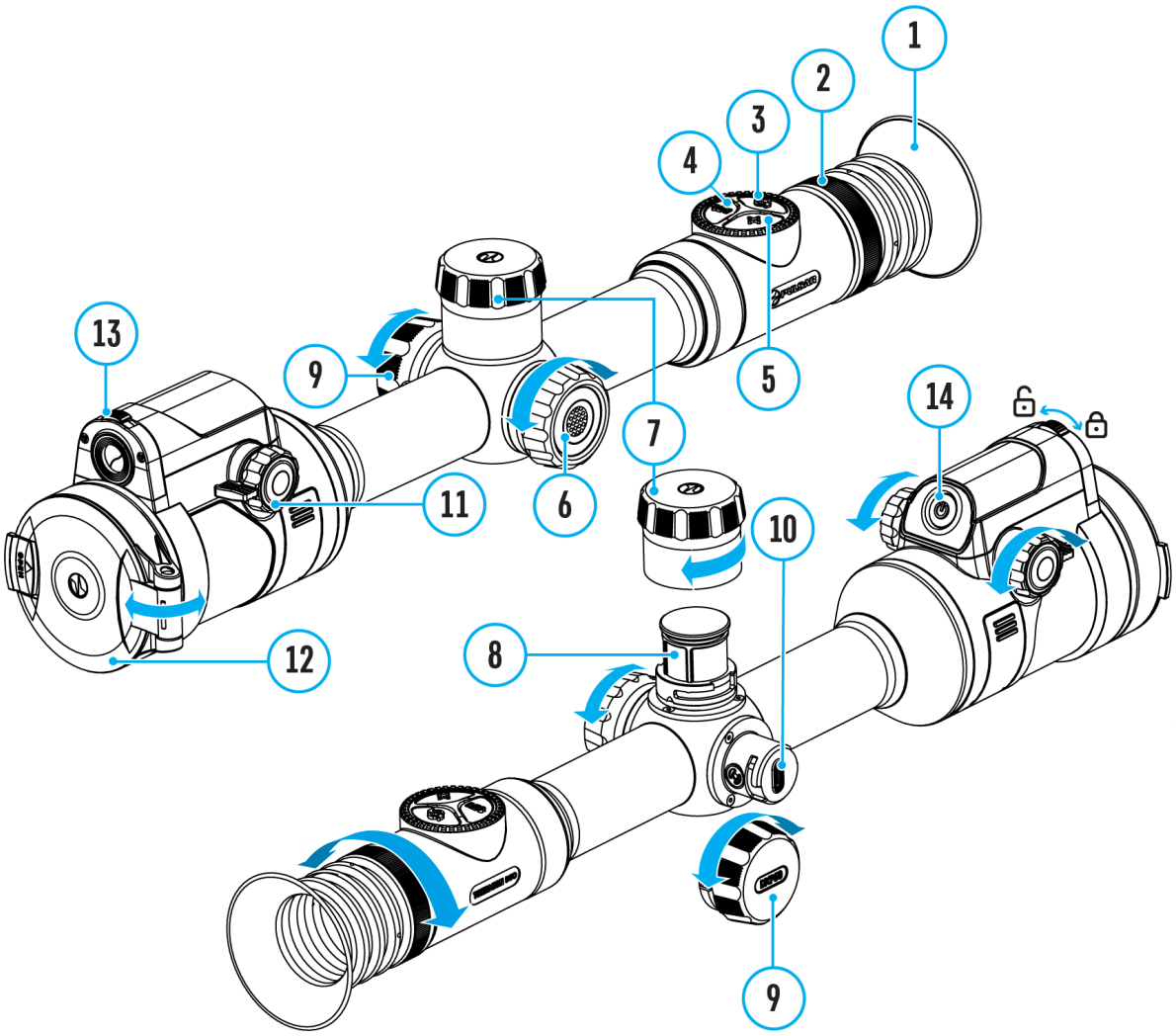

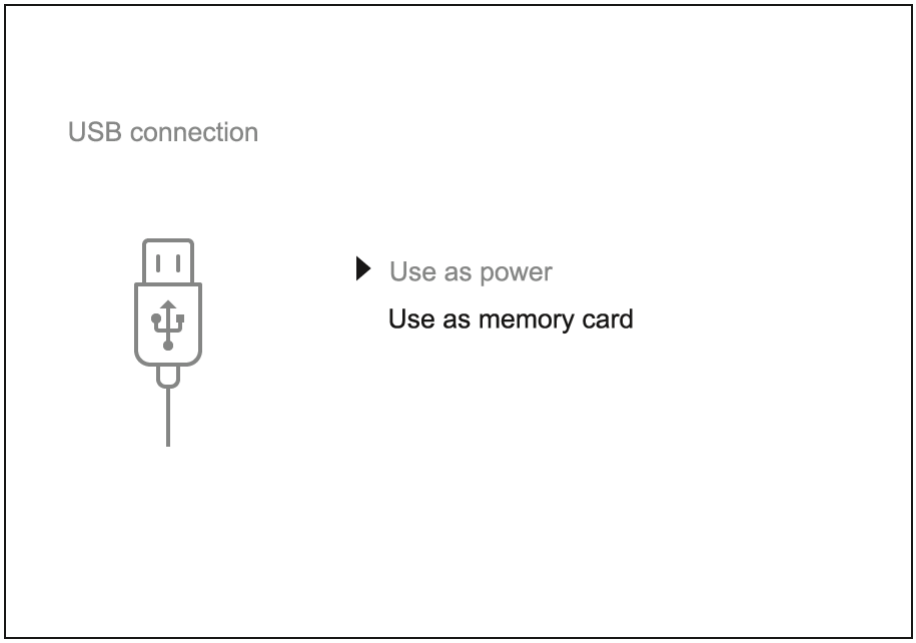

1. Press the **ON/OFF (14)** button briefly to power the riflescope on (the computer will not detect the riflescope if it is turned off).
2. Connect one end of the USB cable to the riflescope USB Type-C port **(10)** and the other one to the port on your computer using a USB Type-A adapter.
3. The riflescope is detected by the computer automatically and no installation of drivers is required.
4. After a few seconds, two connection options appear on the display: **Power** and **Memory card**.
5. Rotate the controller ring**(6)** to select the connection mode.
6. Press the controller button**(6)** briefly to confirm your selection.

Power

- Upon choosing this mode, your PC is used as an external power supply. An icon 100 will appear in the status bar.
- The riflescope continues operating and all functions are accessible.
- Battery recharge feasibility depends on your computer's USB port.

Memory Card

- When selecting this mode, the computer recognizes the riflescope as a memory card. This mode is designed to manage the files saved in riflescope’s memory.
- Even though the riflescope is on, its functions are unavailable in this

mode. It will continue to operate after being disconnected from the computer.
- If a video was being recorded at the moment of connection, the recording will stop and will be saved.

USB Disconnection

- When disconnecting from the computer, the device will continue to operate from the battery pack (if it is present and holding enough charge).
- If the riflescope is in Memory Card mode and is disconnected from USB, the device will remain on.

Stream Vision 2

Install the Stream Vision 2 application to download files, update firmware, control the device by remote control and broadcast images from your device to a smartphone or a tablet via WiFi.

We recommend using the latest version – Stream Vision 2.

Mobile App
STREAM VISION 2

You can find further guidelines on Stream Vision 2 **here.**

Download from Google Play

Download from App Store

Find answers to frequently asked questions about using Stream Vision 2 **here**.

Stream Vision 2 Manual

Android

iOS

Firmware Update

1. Download free Stream Vision 2 App in Google Play or App Store.
2. Connect your Pulsar device to your mobile device (smartphone or tablet).
3. Launch Stream Vision 2 and go to section “Settings”.
4. Select your Pulsar device and press “Check firmware update”.
5. Wait for the update to download and install. Pulsar device will reboot and will be ready to operate.

Important:

- If your Pulsar device is connected to a phone or mobile device, please enable mobile data transfer (GPRS / 3G / 4G) to download the update;
- If your Pulsar device is not connected to your phone or mobile device, but is already in Settings > My Devices, you can use Wi-Fi to download the update.

Find answers to frequently asked questions about using Stream Vision 2 **here**.

Technical Maintenance

Maintenance should be carried out at least twice a year and should include the following steps:

- Wipe the exterior surfaces of metal and plastic parts with a cotton cloth. Do not use chemically active substances, solvents, etc. as these will damage the paint.
- Clean the electric contacts of the battery pack and battery slots on the riflescope using a non-greasy organic solvent.
- Recharge the battery if necessary (50%-80% is recommended for normal use).
- Check the lenses of the eyepiece and objectives. If necessary, remove dust and sand from the optics (it is preferable to use a non-contact method). Cleaning of the exterior surfaces of the optics should be done with cleaners designed especially for this purpose.

Technical Inspection

It is recommended to inspect your riflescope before each use. Check the following:

- The device should be free of any cracks or deformations.
- The lenses of the eyepiece and objectives should be free of cracks, grease, dirt or debris.
- The state of rechargeable batteries (should be fully charged). Electrical sockets should be free of salts, oxidation, or other debris.
- All controls should be responsive.

Troubleshooting

For technical support please contact support@pulsar-vision.com.

Answers to frequently asked questions about the devices can also be found in the **FAQ** section.

The device does not turn on

Possible cause

The Battery Pack is empty

Solution

Charge the Battery Pack

Device malfunction

Solution

In case of any malfunctions during operation, try resetting the device by long pressing the ON/OFF button for 10 seconds.

The device does not operate from an external power source

Possible cause

USB cable is damaged.

Solution

Replace USB cable.

Possible cause

The external power supply is discharged.

Solution

Charge the external power supply.

The thermal image is fuzzy. There are distortions in the form of bars of different widths lying in different directions, or dots of different size and brightness.

Possible cause

Calibration is required.

Solution

Perform image calibration according to **Calibration Mode** section.

Black screen after calibration

Solution

If the image does not clear after calibration, you need to recalibrate.

When the device is turned on, the calibration frequency is at first higher, then decreases (if the automatic calibration mode is enabled)

Possible cause

After turning on the device, it takes some time for the sensor temperature to stabilize. This is normal and is not a defect.

The reticle is blurred and cannot be focused with the dioptre ring

Possible cause

The dioptre adjustment range is not enough for your eyesight.

Solution

If you wear glasses with a range of -3/+5, keep glasses on when looking through the eyepiece.

Coloured lines appeared on display or image has disappeared

Possible cause

The device was exposed to static electricity during operation.

Solution

After exposure to static electricity, the device may either reboot automatically, or require turning off and on again.

The image is too dark

Possible cause

Brightness or contrast level is too low.

Solution

Adjust the brightness or contrast in the **Quick Menu**.

The reticle is crisp but an object at least 30 m away is blurry

Possible cause

Dust and condensation are covering the outside or inside optical surfaces.

Solution

Wipe the outer surface of the objective lens with a soft cotton cloth. Dry the riflescope. Let it stand for four hours in a warm room.

Possible cause

The lens of the thermal imaging channel is not focused.

Solution

Adjust the clarity of the image by turning the focus knob of the thermal imaging channel lens.

The point of impact shifts after firing rounds

Possible cause

The riflescope is not mounted securely or the mount was not fixed with thread sealant.

Solution

Check that the riflescope has been securely mounted.

Make sure you are shooting the same cartridge and load as when the weapon was first zeroed.

Be advised that changes in season, time of day and/or changes in temperature may slightly shift your point of impact. Double checking your zero before hunting is recommended.

After zeroing, the aiming reticle moves relative to the centre of the display

Possible cause

After shooting, the aiming reticle may not be in the centre of the display. This is normal and is not a defect.

Thermal imaging channel is not focused

Possible cause

Wrong settings.

Solution

Adjust the riflescope according to the **Powering on and Image Setting** section.

Check the outer surfaces of the lenses of the thermal imaging channel and the eyepiece and, where necessary, wipe away dust, condensation, frost, etc. In cold weather, you can use special anti-fogging coatings (e.g., the same as for corrective glasses).

Smartphone or tablet cannot be connected to the device

Possible cause

Password in the riflescope was changed.

Solution

Delete network and connect again inserting the password saved in the riflescope.

Possible cause

There are too many Wi-Fi networks in the area where the riflescope is located which may cause signal interference.

Solution

To ensure stable Wi-Fi performance, move the riflescope to an area with few or no Wi-Fi networks.

Solution

Switch the device's Wi-Fi bandwidth.

Possible cause

The device has a 5 GHz network enabled, but the smartphone only supports 2.4 GHz.

Solution

Switch the device's Wi-Fi bandwidth to 2.4 GHz.

More information on solving problems with connection to Stream Vision 2 by following the **link**.

Wi-Fi signal is missing or interrupted

Possible cause

Smartphone or tablet is out of range of a strong Wi-Fi signal. There are obstacles between the device and the smartphone or tablet (e.g., concrete walls).

Solution

Relocate smartphone or tablet into the Wi-Fi signal line of sight.

More information on solving problems with connection to Stream Vision 2 by following the **link**.

There is no image of the observation object in the thermal imaging mode

Possible cause

The object is behind glass, which obstructs thermal vision.

Solution

Remove the glass.

Poor image quality / Reduced detection distance

Possible cause

These problems may occur during observation in adverse weather conditions (snow, rain, fog etc.).

There are several bright or black dots (pixels) on the riflescope display, microbolometer or digital sensor

Solution

The dots are caused by the peculiarities of the manufacturing technology of microbolometers, digital sensors or display and not a defect.

When the device is used in low temperature conditions the thermal image quality is worse than in positive temperatures.

Possible cause

In warm climates, objects in the background of a thermal image heat up differently because of thermal conductivity, generating a high temperature contrast and a sharper thermal image.

In cold climates, objects in the background of a thermal image will cool down to roughly the same temperature, which leads to a greatly reduced temperature contrast and a degraded image quality. This is normal for all thermal imaging devices.

The image of the digital channel has become black and white

Possible cause

When the illumination decreases, the device automatically switches to the black-and-white mode of the digital channel to reduce the level of color noise in the image.

Solution

When the device is moved to a location with sufficient light, the image will automatically turn into color.

There is no thermal imaging or digital image

Possible cause

Lens cover closed.

Solution

Open the covers of the thermal imaging and digital channels.

Possible cause

Channel is turned off.

Solution

Turn on the desired channel in the **“Viewing Channel Activation”** item of the **General Settings** section in the main menu.

Remote control does not work

Possible cause

The Bluetooth module is not turned on.

Solution

Turn on the Bluetooth module according to the instructions (see the **Bluetooth** section).

Possible cause

The Remote control is not activated.

Solution

Activate the remote control according to instructions (see the **Remote Control Activation** section).

Possible cause

The Remote Control is out of range of the device.

Solution

Return to the device coverage area.

Possible cause

Remote control battery low.

Solution

Install a new CR2032 battery as follows: unscrew the screws on the rear cover of the Remote Control, remove the cover, install a new battery, and screw the cover with screws.

Incorrect readings of SPOA

Possible cause

Ballistic calculator uses angle/elevation readings of your riflescope in order to calculate the SPOA. The elevation angle of the riflescope while inputting the distance is not matching the angle of aiming.

Solution

Keep the reticle of the riflescope on the target while manually inputting the distance data.

Legal Compliances and Disclaimers

Attention! Thermion Duo multispectral riflescopes require a license when exported outside your country.

Electromagnetic compatibility. This product complies with the requirements of European standard EN 55032: 2015, Class A.

Caution:operating this product in a residential area may cause radio interference.

Updates of the Product. The manufacturer reserves the right at any time, without mandatory prior notice to the Customer, to make changes to the package contents (subject to the applicable laws, if any), design and characteristics that do not impair the quality of the Product.

Repair. Repair of the product is available within 5 years after purchase of the product.

Limitation of Liability. Subject to mandatory applicable laws and regulations: manufacturer will not be liable for any claims, actions, suits, proceedings, costs, expenses, damages or liabilities (if any), arising out of the use of this product. Operation and use of the product are the sole responsibility of the Customer. Manufacturer’s sole undertaking is limited to providing the product(s) and related services in accordance with the terms and conditions of concluded transactions, including provisions established in warranty. The provision of products sold and services performed by Manufacturer to the Customer shall not be interpreted, construed, or regarded, either expressly or implied, as being for the benefit of or creating any obligation toward any third party (other than Distributor, Dealer, Buyer). Manufacturer’s liability hereunder for damages, regardless of the form or action, shall not exceed the fees or other charges paid to Manufacturer for the product(s) and/or service(s).

MANUFACTURER WILL NOT BE LIABLE FOR LOST REVENUES OR INDIRECT,

SPECIAL, INCIDENTAL, CONSEQUENTIAL, EXEMPLARY, OR PUNITIVE DAMAGES, EVEN IF THE MANUFACTURER KNEW OR SHOULD HAVE KNOWN THAT SUCH DAMAGES WERE POSSIBLE AND EVEN IF DIRECT DAMAGES DO NOT SATISFY A REMEDY.